Application of Solar Technology to Today's Energy Needs—Vol. II

September 1978

NTIS order #PB-289762

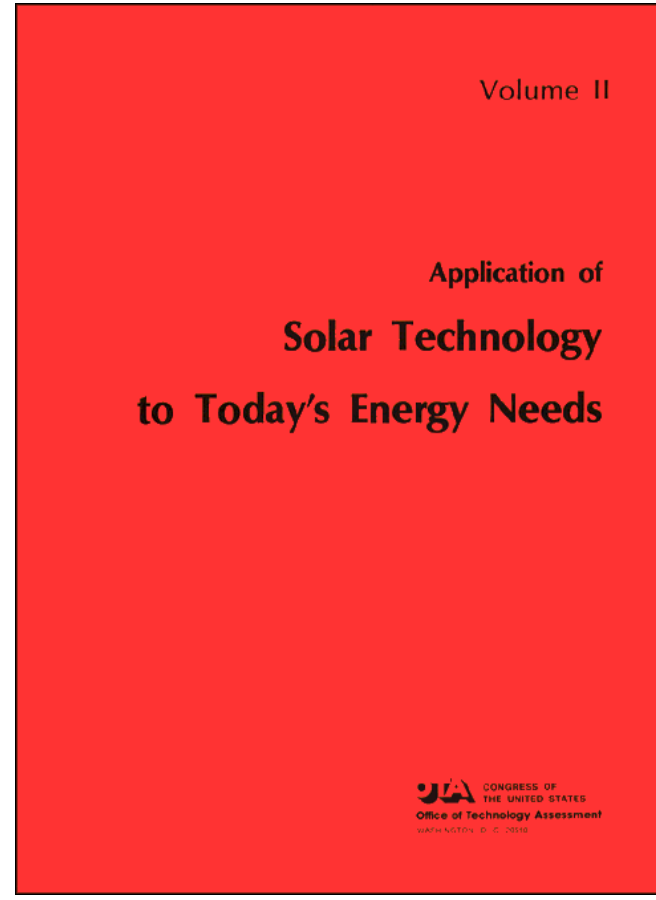

Library of Congress Catalog Card Number 78-600060

For sale by the Superintendent of Documents, U.S. Government Printing Office
Washington, D.C. 20402, Stock No. 052-003-00608-1

PREFACE

The previous volume of this report presented the results of an analysis of a large number of solar energy systems designed to meet the energy requirements of homes, apartment buildings, shoppin, centers, industries, and small communities. This volume provides detailed information about the assumptions made in these calculations and the techniques employed.

An attempt was made to present a broad sampling of the systems which may be available during the next 10 to 15 years. The richness and variety of opportunities is astonishing; chapter IV describes several hundred different systems designs on separate charts. It is difficult to thumb through these pages without admiring the ingenuity and inventiveness of the industry. The richness of this base of ideas and the encouraging rate at which new ideas are emerging, are one of the greatest assets of solar technology.

Apart from presenting a catalog of system concepts, this volume describes a methodology for evaluating the economic and technical merits of small-scale energy systems which can be owned by any of a variety of owners. We hope that the techniques described here will be widely applicable to analysis of small-scale energy systems. The first chapter presents a method for computing the effective cost of energy as a function of the financial expectations and tax status of several different kinds of owners. The second presents a method for computing the performance of different kinds of systems operated in an optimum way. A third chapter presents a technique for parametrizing uncertainties about future fuel and electricity prices. The final pages contain a list of corrections for errors discovered in volume 1.

If the bulk of the resulting work is intimidating, we can only say that we could find no way to abbreviate the presentation without sacrificing a sense of the richness of the alternatives **Or the** complexity of the problem of choosing between them.

OTA Solar Energy Project Staff

Lionel S. **Johns, Energy Program Manager**

Henry **Kelly, Project Leader**

David Claridge **John Furber** **John Bell**

OTA Energy Staff

Richard Rowberg
Lynda Brothers
Marvin Ott
Dorothy Richroath
Linda Parker
Lisa Jacobson
Joanne Seder
Radmilla L. Bartok
Rosaleen Sutton

Technical Assistance

Oak Ridge National Laboratories
Sandia Laboratories
Lawrence Livermore Laboratory
Department of Energy
Division of Solar Energy

Consultants

Timothy Adams
Linda Ashworth
Richard Bourbon
Allen Brailey
Jack Burby
Peter Ceperley
Thomas Erwin
George Harrison
Grayson Heffner
Sam Iker
Ann Cline Kelly
Renal Larson
Robert Morse
Corbyn Rooks
Edward Sproles
Donald Veraska
Don Watt
Mary Zalar

Contractors

American Institute of Architects Research Corporation
Environmental Law Institute
Thermo Electron Corporation
Cotton & Wareham
Jet Propulsion Laboratory
university of Oklahoma, Science& Public Policy Program

OTA Publishing Staff

John C. Holmes, *Publishing Officer*

Kathie S. Boss **Joanne Heming**

OTA Solar Advisory Panel

Jerry Grey, *Chairman*
Private Consultant

William W. Caudill
Caudill, Rowlett & Scott

John J. Gunther
United Conference of Mayors

Klaus P. Heiss
ECON, Inc.

Morton Hoppenfeld
University of New Mexico

Charles Luttman
The Ralph M. Parsons Company

James MacKenzie
Massachusetts Audubon Society

Paul Maycock
Texas Instruments'

Marjorie Meinel
University of Arizona

Larry T. Papay
Southern California Edison Co.

Paul Rappaport
RCA-David Sarnoff Research Center**

Floyd E. Smith
International Association of Machinists

Ephraim M. Sparrow
University of Minnesota

OTA Energy Advisory Committee

Milton Katz, Chairman
Director, International Legal Studies, Harvard Law School

Thomas C. Ayers
President and Chairman of the Board
Commonwealth Edison Company

Kenneth E. Boulding
Professor of Economics
Institute of Behavioral Science
University of Colorado

Eugene G. Fubini
Fubini Consultants, Ltd

Levi (J. M.) Leathers
Executive Vice President
Dow Chemical USA

Wassily Leontief
Department of Economics
New York University

George E. Mueller
President and Chairman of the Board
System Development Corporation

Gerard Piel
Publisher, Scientific American

John F. Redmond, Retired
Shell Oil Company

John C. Sawhill
President
New York University

Chauncey Starr
Electric Power Research Institute

---

*Resigned after accepting position with U.S Department of Energy.

* * Resigned after accepting position as Director of the Solar Energy Research Institute

Contents

Chapter		Page
1.	Analytical Methods	3
11.	Current and Projected Fuel Costs	27
III.	Calculation of Backup Requirements	43
Iv,	**Results of Systems Analysis.**	95
v.	Assumptions Made in the System Analysis	667
VI.	A Detailed Analysis of the Impact of On site Equipment on Utility costs	729
	Errata for Volume I	753

NOT E: This Volume discusses the analytical methods used and provides details on each system analyzed. Volume I summarizes the analysis of system performance and costs, discusses policy, major impacts and constraints on solar markets, and reviews direct solar technology,

Chapter I

ANALYTICAL METHODS

Chapter I.– ANALYTICAL METHODS

Page

Introduction 3
- **Social Discount Theory. 4**
- **Private Evaluation of Costs 5**
- **Quantitative Evaluation of Financing Alternatives 5**
- **Some Basic Equations 8**

Baseline Assumptions 18
- **Inflation 18**
- **Homeowner Financing 18**
- **Rental Properties. 19**
- **Industries 21**
- **Utilities 21**

LIST OF TABLES

Table No. *Page*

I. Baseline Assumptions Used to Prepare Figures I-1 and I-2 7

Table No. *Page*

2. Symbols Used in Financial Analysis 9

3. Summary of the Financing of Public-Owned Utilities in the United States 1973-74.23

4. Historic Pattern of Inflation and Rates of Return on Utility Equity 24

LIST OF FIGURES

Figure No. *Page*

I. Sensitivity of Capital Charges to Consumer's Discount Rate 6

2. Sensitivity of Capital Charges to Rate of Return for Corporate Owner. 7

3. Cumulative Distribution of Chemical, Petroleum Refining, and Paper and Pulp Companies Willing To Invest in Inplant Cogeneration Equipment Versus internal Rate of Return on Investment 22

Chapter I

Analytical Methods

INTRODUCTION

Chapters in volume I have established the technical feasibility of numerous techniques for converting sunlight into other useful forms of energy. The present discussion describes a variety of methods for measuring the value of these systems. It is important to recognize that many of the critical variables cannot be characterized with great precision and cannot be expressed in terms which permit easy comparison. Costs and benefits apply to different groups of investors and consumers (requiring a comparison between costs extracted from one group and benefits enjoyed by another), occur at different times, and occur in different areas (requiring a comparison between impacts on the profitability of individual firms, the environment, employment, national security, civil liberties, etc.). Such issues exceed the capabilities of conventional economic theory. The choice between alternative energy strategies must therefore ultimately reflect a political judgment and must be made without the comfort and guidance of mathematically precise forecasts. It would be dishonest to obscure the fact that such political judgments are necessary, and it is essential to be modest about the capabilities of analysis. All that is possible is to develop techniques for systematically evaluating aspects of the alternatives which can be quantified.

The perceived costs of solar energy depend strongly both on the perspective from which they are examined and on the methods used for evaluating them. It is fair to assume that investors are attracted to solar equipment only if they are able to earn rates of return comparable to those earned in other types of investments exhibiting Similar risks. The measure of merit, which is the primary basis for economic comparisons in this report, is the price paid by the ultimate consumer of energy. This price depends on the kind of equiptment used and on the economic expectations of the owner of the equipment. The following discussion develops a self-consistent technique for reducing the large number of variables which affect this price to an easily interpretable average consumer energy price.

The financial merit of investments can be assessed in a number of different ways. Methods vary in their sophistication, and alternative investments are often ranked differently depending on the method used. The techniques include a comparison of:

— initial capital investment;

—the "payback time, " or the time required for cumulative income to equal the initial investment;

—rates of return from the investment; and

—the "present value" of investments.

The techniques actually used to compare investments vary greatly and frequently involve a number of factors which are not easy to quantify. Critical decisions depend on the financial condition of the investor, his perception of the risk involved, the skill with which the proposed equipment is marketed, the availability of funding, his attitude toward diversifying his investment portfolio, and other psychological factors. The simple comparison of initial costs, for example, will almost certainly continue to be one of the most critical variables in making decisions, in spite of the fact that sophisticated analysis might show that decisions based on this comparison may be unwise. It is important, therefore, not to be mesmerized by quantitative measures of merit when attempting to assess the marketability of equipment.

The bulk of the analysis in this report is based on discounted cash-flow (or "present value") analysis — a systematic way of evaluating the profitability of different kinds of investments.

SOCIAL DISCOUNT THEORY

Before proceeding into the detailed analysis of private investment decisions, a brief review will be given of an entirely different technique for evaluating the cost of energy equipment. The "social" cost of energy —or the cost perceived by society as a whole— may differ greatly from the costs perceived by individual producers or consumers, even if the full costs of environmental damage and other immediate social disbenefits are identified and charged to the appropriate equipment owner. For example, today's market does not accurately reflect the cost of resources which are being depleted but are not now in short supply. This lack of foresight is encouraged by policies designed to keep prices artificially low (price regulations, concessionary tax policies, etc.). Another reason for the differences between private and social costs is the way in which any analyses made by private investors discount future costs and benefits with respect to present costs. The interest rate, which should be used to evaluate the real marginal productivity of capital from the point of view of society as a whole (the so-called "social discount rate"), is the subject of considerable dispute.

The value of societal costs computed in this way must be treated with great caution. If ranking energy alternatives with these simple discounting procedures results in very different priorities than the ranking which results from conventional financial analysis, however, it will be important to be able to understand whether the difference really implies that conventional financial decisions are resulting in a sacrifice of social benefits for short-term private gains. In this sense calculating a "societal cost" can serve as a kind of warning mechanism, but much work remains to be done after the warning has been received. It must be noted that this technique does not eliminate the difficulty of assigning a just value to goods or services, since all prices used in the calculation are estimates of prices in the open market; determining a real marginal cost to society for each item costed would give a better answer but there is no agreement about how to conduct such estimates.

It might be thought that the Federal Government would make decisions to maximize social benefits, but the argument of how to measure the real value of a Federal investment is more complex than the debate over techniques used to measure "social value. " It could be argued, for example, that if the Government extracts capital from society, it must invest this capital so as to yield an effective rate of return equivalent to that which would be earned on the money in private hands. This is, in effect, the current policy of the U.S. Government. The basis for Federal procurement is dictated by the Office of Management and Budget, which has declared that the Government should invest funds in a manner which earns a rate of return equivalent to that earned by a typical private concern "before inflation and after taxes." This is declared to be 10.0 percent. '

[1]OMB Circular A-94.

It is clear, however, that this rigid formula maximizes social benefits only if it assumed that social benefits are maximized by private investment decisions. I n several European nations different discount rates are applied to projects on the basis of political judgments about the social merits of different technologies and the technique has been used in the past by the United States as an implicit subsidy to water projects, rural electrification, and other investments felt to be in the public's interest.

PRIVATE EVALUATION OF COSTS

This analysis provides quantitative measures of the financial attractiveness of solar energy measured from four separate perspectives:

1. An individual contemplating investing in equipment for his private residence.
2. A corporation which will include the cost of the solar energy in the price of the company's product or service (the corporation might own an apartment building, for example, and include energy costs in the rent, or it might own a manufacturing concern using solar energy to provide power for manufacturing processes).
3. Utility ownership (both private and municipal utilities are examined).
4. Federal, State, or municipal governments.

The economic perspectives of these four types of investors differ in a number of respects. Each has different expectations about the profitability of investing in solar equipment; has access to different types of financing; is subject to different rates of interest by lenders; has different tax status (tax rates and allowed deductions and credits differ); and each compares alternatives using techniques which differ greatly in sophistication. As a result, separate analysis is necessary to predict whether investors in each group would be attracted to solar energy. Separate analysis is also necessary to measure the impact of proposed policies on each type of owner since each group is influenced by incentives in different ways. There are also great differences between investors in the same category, and the categories themselves do not reflect the full complexity of the situation. The analysis which follows selects representative examples from each group.

Utilities' perspectives on energy costs are unique since while a utility's customers pay a price which represents the average cost and make investments on this basis, the utility will compare prospective new investments on the basis of higher marginal costs; the costs of electricity and the cost of fossil fuels from some new sources are significantly higher than the average or "imbedded cost" of energy from all generating sources.[2]

QUANTITATIVE EVALUATION OF FINANCING ALTERNATIVES

The cost of operating any kind of energy equipment can be divided into four broad categories:

1. **Capital** Costs.–These include the cost of paying investors for their funds, and any taxes and insurance which must be paid on tangible property. In most cases, all of these costs are directly proportional to the initial cost of the system.
2. **operating and Maintenance (O&M)** Costs. -These include costs of keeping equipment in repair, paying operators, etc., but do not include fuel costs.
3. **Energy** Costs.–These include the price paid-for all fossil fuels and electricity used by the equipment. In cases where energy can be sold to a utility, the owner's energy costs are reduced by the amount of income received from this source.

[2] Paul L. Joscow, "Inflation and Environmental Concern: Structural Change in the Process of Public Utility Price Regulation, " 17,2 (autumn *1974),* p 291,

4. **Replacement Costs. -These include the cost of replacing those large pieces of equipment which wear out before the bulk of equipment in the system.**

Most of the differences between owners are reflected in the cost of capital, since this this represents differences in tax status. It is **shown later that the component of the average cost of energy to the final consumer, which is traceable to capital costs, can be written in linear form regardless of ownership. This capital cost is written in the following form:**

average capital charges perceived by the final consumer of energy
= k_i X (initial cost of equipment)

The constant in this equation (k_i), called the "levelized fixed charge rate, " represents the ratio between the portion of consumer prices attributable to capital-related costs and the initial cost of equipment. Its value is shown in figures I-I **and** I-2 **for several assumptions about ownership. The assumptions used to prepare these curves are shown in table I-I (the origin of these assumptions are discussed in a later section). The figures implicitly assume inflation, since the interest rates and rates of return expected reflect actual market rates.**

Figure I-I shows the relationship between capital charges and the consumer's discount rate. Figure I-2 shows relationship between capital charges and the rate of return expected by a corporate owner. The capital costs charged to consumers by the corporate owner are assumed to be constant during the lifetime of the plant (this is usually called "normalized" accounting), and therefore the average cost of capital to the consumer is independent of the consumer's discount rate.

Figure I-1 .—Sensitivity of Capital Charges to Consumer's Discount Rate

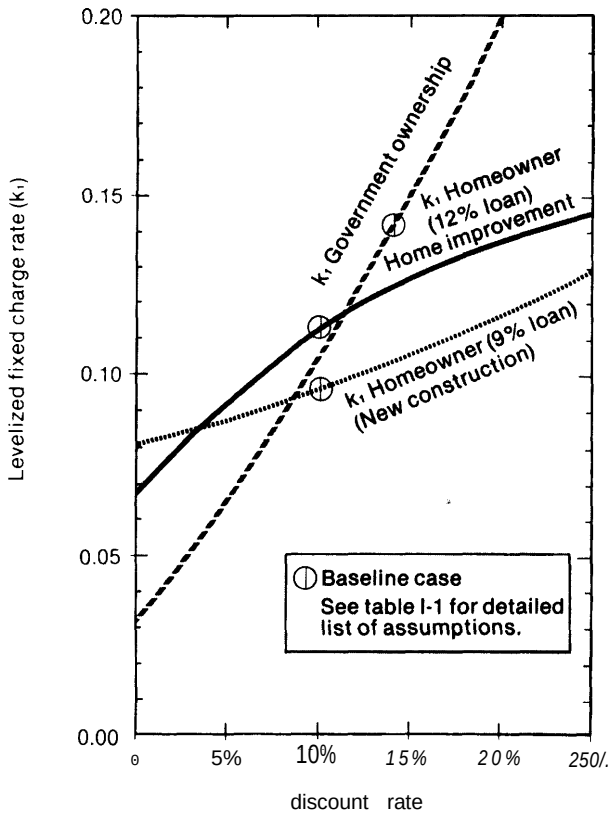

Figure 1-2.—Sensitivity of Capital Charges to Rate of Return for Corporate Owner

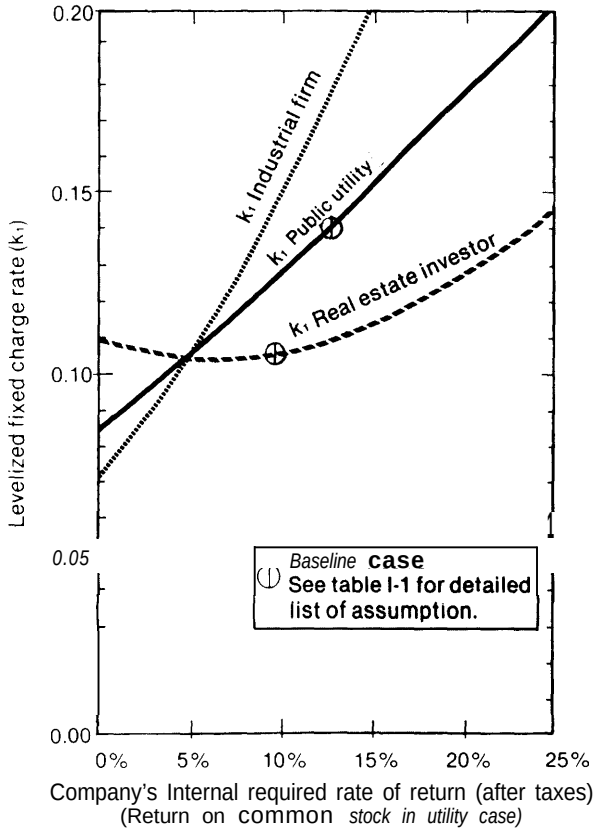

Table I-1.— Baseline Assumptions Used to Prepare Figures I.1 and I.2.

	Federal Government	Homeowner (new construction)	Homeowner (home improvement)	Real estate investor	Industry	Public utility	Municipal utility
Required rate of return	.16	variable	variable	.10	.20	—	0
Down payment fraction	1.0	.25	0	.25	.70	0	0
Interest on loan or bonds	—	.09	.12	.10	.10	.09	0.06
Debt fraction	0	.75	1.0	.75	.30	.53	1.00
Earnings on pfd stock	—	—	–	—	—	.09	0
Fraction of pfd stock	0	0	0	0	"0	.122	0
Earnings of common stock	—	—	—	—	—	.13	0
Fraction of common stock	0	0	0	0	0	.348	0
Depreciation:		–	—	DDB	SL	DDB	.
Depreciation period		—	—	15	30	30	–
Marginal income tax rate (combined Federal & State)	0	.35	.35	.50	.50	.50	0
Life/term of loan (yrs)	30	30	10	30	30	30	30
Property tax rate	0	.02	.02	.02	.02	.02	.02'
insurance rate	0	.0025	.0025	.0025	.0025	.0025	.0025
Investment tax credit rate	0	0	0	0	.10	.10	0
Inflation rate	0	.055	.055	.055	.055	.055	.055
Salvage value ($)	0	0	0	0	0	0	0
Depreciation of replacement	—	—	—	DDB	SL	DDB	—

SL = Straight-line depreciations DDB = Double. declining balance depredation . Payments in lieu of taxes
NOTE All costs are levelized over 30 years

The routine operating and maintenance (O&M) costs of a system are written in the following form:

average O&M costs perceived by energy consumer
= k_2 X (O&M cost in first year of the system's operation)

where the constant k_2 depends on the consumer's discount rate, the life expectancy of the system, and on the average rate of inflation. It is assumed that operating costs do not change in constant dollars for the life of the system. This represents a considerable simplification of real cases, since the costs of maintaining and repairing real systems vary from year to year and overall maintenance costs tend to increase as the system ages. The approximation used here is necessary, however, since it is difficult or impossible to estimate the maintenance schedules reliably, particularly for untested or hypothetical systems.

The fuel costs are written in the following form:

average energy costs perceived by consumer
= k_3 X (energy costs in the first year of the system's operation)

where k_3 depends on the life expectancy of the system, the consumer's discount rates, and assumptions about the rate at which energy from conventional sources increases in price.

The replacement costs are somewhat more complex, since they depend on the number and schedule of replacements.

Using the terms defined here, the levelized annual cost of energy to the ultimate consumer of that energy (which is called PRICE) can be written in the following form:

PRICE = k_1 x (initial price of equipment)
+ k_2 x (initial O&M costs)
+ k_3 x (initial energy costs)
+ (levelized replacement costs)

The remainder of this discussion is directed towards a detailed analysis of the value of these constants for a variety of assumptions about ownership, costs of capital, and regulatory policy.

SOME BASIC EQUATIONS

The present value of all consumer energy expenses can be computed as follows:

$$\text{PRESENT VALUE (d)} = \sum_{t=0}^{N} \frac{[\text{energy-related expenses in year } t]}{(1+d)^t} \quad (1)$$

where N is the lifetime of the system in years. (Table I-2 contains a dictionary of variables used in this section and can be used for reference.) The function PRICE was defined previously to be the average cash outlay which, if paid in equal amounts during the life of the system, would result in the same present value as the actual cash flow. This can be computed from the previous function as follows:

$$\text{PRICE (d)} = \text{CRF(d,L)} \times [\text{PRESENT VALUE (d)}] \quad (2)$$

$$\text{CRF}(d,L) = \frac{d(1+d)^L}{(1+d)^L - 1} \quad (3)$$

where CRF(d,L] is a constant called the "capital recovery factor. " (The name results from the fact that CRF(d,L) is also the ratio between the annual payments on a loan and the initial value of the loan if it is for L years and pays an interest rate d.) The price function is very closely related to the present value of an investment calculated using conventional techniques.

Federally Owned Equipment

A variety of techniques are used to evaluate Federal investments. The following discussion will follow the procedures suggested for use in internal planning by OMB Circular A-94. This procedure requires the estimate of both discounted costs and benefits, but since the benefits are assumed to be identical for all systems compared only the procedure for evaluating costs will be outlined.

Table I-2.—Symbols Used in Financial Analysis

a = accelerated depreciation multiplier (a = 1 for straight line; a = 2 for double-declining balance)

B(r,LN,t) = interest paid during year t on $1.00 of debt paying interest r over LN years (defined in equation 12)

CRF(d,L) = capital recovery factor for a loan with interest d payable over L years (defined in equation 3)

d = consumer's discount rate

d' = consumer's discount rate in constant dollars (1 +d') = (1 + d)/(1 + i)

D(a,DP,t) = permitted depreciation of $1.00 of initial investment in year t given a permitted depreciable lifetime of DP and an accelerated depreciation multiplier of a (defined in equation 22)

DEP(a,DP,R) = net present value of depreciation with accelerated depreciation multiplier a, depreciation period DP, and discount rate R (defined in equation 29)

DP = depreciation period

E(t) = payments for energy made during year t (evaluated in constant dollars valued at the first year of the system's operation)

f = fraction of initial value of system financed with mortgage

FIX = fixed charge made by a utility or other industry to cover levelized capital expenses and yield the desired rate of return

f_b = fraction of utility plant financed with bonds

f_c = fraction of utility plant financed with common stock

f_p = fraction of utility plant financed with preferred stock

i = annual rate of inflation

IN = fraction of capital value of plant paid for insurance annually

INCOME(t) = gross receipts received by a system owner during year t of a system's operation

ITC = investment tax credit (fraction of capital value of plant deducted from taxes in first year of operation)

K_o = installed initial cost of equipment including inflation and interest during construction. K_o is evaluated in dollars valued at the first year of the system's operation

K(t) = capital expended during year t of a plant's construction (evaluated in dollars valued at the first year of the system's operation)

k_1 = multiplier for determining the capital-related component of the levelized PRICE paid by customers for energy from the initial installed cost.

k_2 = multiplier for determining the energy component of the levelized PRICE paid by customers for energy from the energy cost in the first year of the system's operation*

ks = multiplier for determining the routine maintenance component of the levelized PRICE paid by customers from the cost of routine maintenance in the first year of the system's operation"

$k_4(t)$ = multiplier for determining the contribution of a major replacement made during year t to the levelized PRICE paid by customers given the *cost* **of the replacement in year t measured** in dollars valued during the first year of the system's operation*

L = period over which system costs are measured

LN = period of loan

M_o = routine operating costs in the first year of the system's operation

M(t) = major replacements made during year t of the systems operation (measured in dollars valued at the first year of the system's operation). For most **years** M(t) will be zero

N = the system's life in years

N_c = number of years required to construct a large plant or system

N_r = life of major replacements

PV(d) = present value of a cash flow given a discount rate d (defined in equation 1)

PRICE = levelized annual price charged to the customer

PT = fraction of initial capital value of the equipment paid annually for property tax

r = interest rate paid on mortgages

R = commercial and industrial required rate of return

R_U = utility's permitted rate of return (defined in equation 32)

r_b = interest rate paid by utilities on bonds

= return paid by utilities on common stock

= return paid by utilities on preferred stock

S(R,LN) = annual amount paid by utilities into a sinking fund to retire debt at the end of LN years assuming that the fund is invested at a return of R (defined in equation 35)

t = the year of system operation under consideration

T = net income tax rate (defined in equation 11)

T_f = Federal income tax rate

T_s = State income tax rate

TAX(t) = income tax paid in year t

ð(t) = a switch function used for convenience, b(t) = O unless t = O in which **case** ð(0) = 1

"NOTE: On the k_1, k_2, k_3, and k_4 (t) multipliers, no primes indicate Federal financing, one prime indicates homeowner financing, two primes indicate conventional commercial financing, three primes Indicate utility financing using normalized accounting, and four primes indicate utility financing using flow-through accounting.

34-117 O - -9 - 2

The expenses occur in four separate categories:

CAPITAL-RELATED EXPENSES

The initial capital investment is called K_o. Since all of this investment is assumed to be made in the first year, no discount is applied and therefore the levelized capital costs can be written as follows:

$$\text{LEVELIZED CAPITAL COSTS} = k_1 K_o \qquad (4)$$

$$k_1 = CRF\ (d,L)$$

where CR F(d,L) is the capital recovery factor defined previously, L is the period over which the system costs are evaluated and d is the Federal discount rate. (The OMB circular states that for planning purposes, the Government should use d = 10.0 percent, if all expenses are expressed in constant, uninflated dollars.)

ENERGY EXPENSES

Energy expenses must be discounted to present value using the discount rate. If the cost of energy in constant dollars in a year t is called E(t), then the levelized energy expense is given by:

$$\text{LEVELIZED COST OF PURCHASED ENERGY} = k_2 E(1) \qquad (5)$$

$$k_2 = CRF(d,L) \sum_{t=1} \frac{E(t)}{E(1)} \left(\frac{1+i}{1+d}\right)^t$$

where i is the rate of inflation.

O&M EXPENSES

For simplicity, it is assumed that the routine operating and maintenance expenses (excluding energy costs) will not change during the life of the system if these expenses are expressed in constant dollars. If these constant expenses are called MO, the levelized annual O&M expenses are given by:

$$\text{LEVELIZED OPERATING COSTS} = k_3 M_o \qquad (6)$$

$$k_3 = CRF(d,L)/CRF(d',L)$$

$$d' = (1 + d) / (1 + i) - 1$$

REPLACEMENT EXPENSE

It may be necessary to replace major components during the life of the system. If the cost of replacements made in the year t (less the salvage value of the component replaced) is called M(t), the levelized value of replacement costs can be computed as follows:

$$\text{LEVELIZED REPLACEMENT COSTS} = \sum_{t=1}^{t=L} k_4\ (t)\ M\ (t) \qquad (7)$$

$$k_4\ (t) = CRF(d,L) \left(\frac{1+i}{1+d}\right)^t \qquad (8)$$

(Note that M(t) is zero for most years.)

PRICE

The total levelized costs of providing energy services can then be written as follows:

$$\text{PRICE} = k_1 K_O + k_2\ E\ (1) + k_3 M_o + \sum_{t=1}^{L} k_4\ (t)\ M\ (t) \qquad (9)$$

Homeowner Financing

A calculation of the effective price paid by a homeowner for energy generated by a solar device which he owns requires adding a number of complexities to the case just described, although the overall components of cost fall into the same four categories and the final formula for levelized cost can also be reduced to a simple linear equation identical to equation (9).

CAPITAL-RELATED EXPENSES

The capital-related charges for a homeowner fall into four basic categories:

Payment on a mortage.—It is assumed that the homeowner will finance a solar unit on a new home with the same mortage used to purchase the rest of the house, and that systems retrofitted to existing homes are

financed with "home improvement loans" covering the full value of the improvement. If it is assumed that the loan covers a fraction (f) of the equipment and that an interest rate (r) must be paid for a period of (LN) years, the annual mortgage payments are given **by:**

$$\text{ANNUAL MORTGAGE PAYMENTS} = f\,K_o\,CRF(r,LN) \qquad (10)$$

Income taxes.–The homeowner will be able to deduct the interest paid on the equipment and property taxes from his income when he computes his taxes. It is assumed that the owner pays a net income tax rate T. Since State taxes are deductible from Federal taxes the net tax rate T can be computed from the Federal tax rate T_f and the State tax rate T_s as follows:

$$T = T_f(1-T_s) + T_s = T_f + T_s - T_f T_s \qquad (11)$$

The interest in year t on the loan value fK_o will be given by:

$$\text{(INTEREST ON MORTGAGE PAID IN YEAR } t) = fK_o B(r, LN, t) \qquad (12)$$

$$B(r,LN,t) = [(1+r)[-(r-CRF(r,LN)^{+} \; CRF(r,LN)]$$

Property taxes.—It is assumed that property taxes are charged at a rate which is directly proportional to the initial value of the installation, and that these payments are given by:

$$\text{PROPERTY TAXES} = PT\,K_o \qquad (13)$$

where **PT is the property tax rate.**

Insurance.–It is assumed that the owner pays insurance on the equipment at a rate directly proportional to the initial value of the installation and that these payments are given by:

$$\text{INSURANCE PAYMENTS} = IN\,K_o \qquad (14)$$

Using this notation, **a down payment of $(1 - f)K_o$ will be made in year O and the total annual capital-related costs during year t can be expressed as follows:** (15)

$$\text{CAPITAL CHARGES (t)} = K_o\,[(1-f)\,CRF(d,L) + fCRF(r,LN) - Tf(1+r)^{t-1}(r-CRF(r,LN) + CRF(r)LN) + (1-T)PT + IN]$$

and the levelized capital charges can then be expressed as follows:

$$\text{LEVELIZED CAPITAL CHARGES} = k_1 K_o \qquad (16)$$

$$k_1' = CRF(d,L)\left[(1-f) + f(1-T)\frac{CRF(r,LN)}{CRF(d,LN)} - \frac{fT}{1+r}\,\frac{r-CRF(r,LN)}{CRF(d',LN)} + \frac{(1-T)PT}{CRF(d,L)} + \frac{IN}{CRF(d,L)}\right]$$

$$d' = (1 + d) / (1 + r) - 1$$

ENERGY EXPENSES

The levelized cost of fuel and electricity purchased by a homeowner can be expressed in terms of the price paid for these items during the first year of the system's operation E(l). The equations are identical to the ones developed **in the previous case:**

$$\text{LEVELIZED COST OF PURCHASED ENERGY} = k_2' \sim E(l) \qquad (17)$$

$$k_2' \sim = CRF(d,L) \sum_{t=1}^{L} \frac{E(t)}{E(1)} \left(\frac{1+i}{1+d}\right)^t$$

O&M EXPENSES

If the cost of routine annual operating and maintenance expenses (not including the cost of purchased **energy) during the first year the system operates is called M_o, the cost of** O&M in **the year t will be equal to $(1 + i)^t M_o$ where i is the rate of inflation. The levelized cost of O&M can then be expressed as follows:**

$$\text{LEVELIZED O\&M COSTS} = k_3 \sim M_o \qquad (18)$$

$$k_3' = k_3$$

where k_3 was defined in equation (6).

REPLACEMENT EXPENSES

It is assumed that the homeowner does not take out a loan to replace components of his onsite system but simply pays for new components out of existing savings. The levelized replacement costs can then be expressed in terms of the cost of items replaced each year.

$$\text{LEVELIZED REPLACEMENT COSTS} = \sum_{t=1}^{L} M(t)k'_4(t) \qquad (19)$$

$$k'_4(t) = CRF\,(d,L)\left[\frac{(1+i)}{(1+d)}\right]^t \qquad (20)$$

PRICE

The levelized price the homeowner pays can then be written as:

$$\text{PRICE} = k'_1 K_o + k'_2 E(1) + k'_3 M_o + \sum_{t=1}^{L} k'_4(t)M(t) \qquad (21)$$

Commercial and Industrial Financing

The following discussion estimates the price which is charged by firms other than utilities for energy services. It is impossible to construct a single procedure for evaluating the financing of all private firms, since each has different sources of financing, is in a different tax position, and has different financial objectives. The procedure described below provides a simplistic way of evaluating:

- The price which an owner of an apartment building charges for energy services (lighting, miscellaneous electricity, heating, cooling, and hot water).
- The amount the price of a manufactured item is increased to pay for energy used by a manufacturing concern.

CAPITAL-RELATED EXPENSES

In computing the price, it is assumed that equipment owners expect a fixed rate of return on their equity and that all operating and maintenance costs (including the cost of purchasing fossil fuels and electricity) are passed along directly to the customer. If the investment in novel energy equipment is perceived to involve a greater risk, the expected rate of return will probably be higher than those expected from other areas of the same industry.

There are three major differences between the financial analysis made for the homeowner and the analysis which must be made for commercial and industrial firms:

- Depreciation of energy equipment, fuel, and operating costs can be sub tracted from gross income for tax purposes.
- Investment tax credits may be available.
- Insurance payments are tax deductible.

Depreciation.-The type of depreciation permitted by the IRS depends both on the type of business and on the nature of the equipment involved. A ruling must be made both on the system's lifetime for depreciation purposes and on whether an accelerated depreciation technique will be permitted.

If a new building derives more than 80 percent of its revenues from apartment rental income, and if it has only a single owner, the heating and cooling equipment in the unit can presently qualify for "double declining balance" depreciation. Buildings with more than one owner are permitted only a 1.25 declining balance. Most new industrial equipment can also qualify for double declining balance for tax purposes if its expected life is greater than 3 years. A ruling by IRS on solar equipment must be made. For a first approximation it will therefore be assumed that the equipment is treated like conventional heating and cooling systems for tax purposes. These assumptions can be changed if other rulings are made by IRS,

and possibilities are examined in the policy discussion.

The depreciation in year t will be called $D(a, DP,t)K_o$ where a = 2 for double declining balance, a = 1.25 for 1.25 declining balance, etc. Double-declining balance depreciation will be assumed in most cases. This means that the owner can deduct twice the straight-line depreciation calculated on the basis of the depreciated value of the equipment in the year the depreciation is claimed (e.g. if a $100 asset has a 10-year life, the first year deduction is 2 x $100/10 = $20, the second year deduction is 2 x (100 – 20)/10, and so on. It is permissible to shift from an accelerated depreciation technique whenever there is an advantage in doing so. It is assumed that the investor will make such a shift.

D(a,DP,t) can be written explicitly as follows:

$$D(a,DP,t) = \begin{cases} (a/DP)\,(1-a/DP)^{t-1} & t < t_o \\ (1-a/DP)^{t_o-1}/(DP-t_o+1) & t \geq t_o \end{cases} \tag{22}$$

t_o = the first year for which t is greater than or equal to 1 + DP (I-I/a)

A shift is made to straight-line depreciation when $t = t_o$. Notice that if a = 1 the shift is made at the first year and the depreciation is a simple straight line for the entire system lifetime.

Tax Credits.–Some of the equipment being examined may qualify for an investment tax credit. This credit can only be taken in the first year of the system's operation, and has been 10 percent of qualifying capital for the past few years. When tax credits are allowed, the calculations assume that the owner is permitted a single-tax credit equal to ITC x K_o during the first year of operation. The constant ITC is the ratio of the credit obtained to the initial capital value of the equipment (K_o).

Insurance Deductions.—Insurance payments can be subtracted from gross income for tax purposes.

PRICE

The price charged by the owner of the energy equipment can be calculated from: (1) the annual payments which must be made to cover capital and operating costs (the payments made in year t are called OUTLAYS(t)); (2) the gross income received (income); and (3) the taxes paid (TAX(t)). These items can be evaluated as follows:

$$\text{OUTLAYS}(t) = \begin{cases} (1-f)K_o & \text{when } t=0 \\ K_o[PT+IN+fCRF(r,LN)] + \\ (1+i)^t[M_o+M(t)+E(t)] \\ +TAX(t) & \text{when } t>0 \end{cases} \tag{23}$$

where f = fraction of project financed by debt

$$\begin{aligned} TAX(t) = {} & T(INCOME(t) - (1+i)t(Mo+M(t) + E(t)) - \\ & K_o(fB(r,LN,t) + D(a,DP,t) + PT + IN) \\ & - (\text{deductions for major replacements})] \\ & - K_o ITC\,\delta(t-1) \end{aligned} \tag{24}$$

$$\delta(t) \equiv \begin{cases} 1 & \text{when } t = 0 \\ 0 & \text{otherwise} \end{cases}$$

As shown, the tax is reduced by K_oITC in the first year of operation. It is assumed that the income from the project consists of a constant charge for capital which permits the owner to earn his desired rate of return. The desired rate of return is called R and the constant capital charge is called FIX. It is also assumed that all operating costs, including the cost of purchased fuels, are passed along to customers in the year in which they are incurred. The routine annual operating costs (excluding the cost of purchased energy) are called MO; the cost of major items replaced during year t is called M(t) which in most years is zero); and, the cost of energy purchased in the year t is called E(t). All of these costs are expressed in constant dollars valued in the initial year of the system's operation. The income derived from an investment in energy equipment during year t can then be written as follows:

$$INCOME(t) = FIX + (1+i)^t(Mo+E(t)) \tag{25}$$

where i is the assumed rate of inflation. By definition, if the owner charges rates which yield an income equal to INCOME (t), the owner is earning a rate of return R on his investment, and the present value of all cash flows discounted using the owner-desired rate of return R is zero. It can be shown that:

$$FIX = k_1''K_0 + \sum_{t=1}^{L} k_4''(t)M(t) \tag{26}$$

$$k_1'' = \frac{CRF(R,L)}{1-T}\left[(1-f) + f(1-T)\frac{CRF(r,LN)}{CRF(R,LN)} - \frac{fT}{1+r}\,\frac{r-CRF(r\ LN)}{CRF(R',LN)} - \frac{ITC}{1+R} - T \times DEP(a\ DP,R)\right] \tag{27}$$

$$+ IN + PT$$

$$R' = (1+R)/(1+r) - 1 \tag{28}$$

The net present value of depreciation D(a, DP, t) over the depreciation period DP is DE P(a,DP, R) and can be written as:

$$DE\,P(a,DP,R) = \begin{cases} 0 & \text{if } d = 0 \\ \dfrac{1}{DP[CRF(R,DP)]} & \text{if } a = 1 \\ (a/DP)\,\dfrac{1-\left[\dfrac{1-a/DP}{1+R}\right]^{to-1}}{R + a/DP} + \left[\dfrac{1-a/DP)^{to-1}}{(DP-to+1)}\right]\left[\dfrac{(1+R)^{DP+1-to}-1}{R\,(1+R)^{DP}}\right] & \text{if } a > 1 \end{cases} \tag{29}$$

$$t_o = \text{first integer greater than or equal to } 1 + DP(1-1/a) \tag{30}$$

$$k_4''(t) = \frac{CRF(R,L)}{1-T}\left(\frac{1+i}{1+R}\right)^t \times \left[1 - \frac{ITC}{(1+R)} - T \times [DEP(a,DP,R)]\right] \tag{31}$$

The levelized price paid by customers is readily calculable once FIX is known since:

$$PRICE = FIX + CRF(d,L)\sum_{t=1}^{L}\left|\frac{[M_o + E(t)]\ (1+i)t}{(1+d)^t}\right. \tag{32}$$

$$PRICE = k_1''K_o + k_2'E(I) + k_3'M_o + \sum_{t=1}^{L} k_4''(t)M(t) \tag{33}$$

Utility Financing

The financing of utility projects is a complex process. Projects are of enormous scale, many sources of funds are used, and a network of regulations govern accounting procedures. Financing varies greatly from region to region because of different rulings by the State public utility commissions which monitor utility financing. Furthermore, public and privately owned utilities are financed in very different ways. The following discussion presents a series of simplified methods for approximating utility accounting. A standardized procedure for computing utility costs has been developed in two recent analyses, and the methods developed here are a somewhat simplified version of these procedures. [3,4]

CAPITAL-RELATED EXPENSES

Rate of Return.–The major difference between investments made by utilities and in-

[3] *The Cost of Energy From Utility-Owned Solar Electric Systems: A Required Revenue Methodology for ERDA/EPRA Evaluations, June 1976 (ERDA/J PL-101 2-76/3).*

[4] *EPRI Technical Assessment Group, Technical Assessment Guide, August 1977.*

vestments made by the smaller organizations discussed previously is the source of funds used for construction and operations. utilities have three primary **sources of funds: common stock, preferred stock, and bonds.** The fraction **of a given facility financed by each of these sources are called f_c, f_p, and f_b, respectively. The rate of return which a utility must earn to meet its obligations (R_u) can be computed from those fractions and from the rates of return which must be paid for each source of capital (these are called r_c, r_p, and r_b). Note that debt service is tax deductible, whereas stock dividends are not.**

$$R_u = (1-T) r_b f_b + r_c f_c + r_p f_p \tag{34}$$

There is some dispute in the utility community about whether to reduce the cost of debt by the factor I-T as shown in equation (34).

The rates which can be earned by utilities are controlled by public utility commissions in each locality, and the return earned by holders of common stock varies as a function of the rulings of these commissions and the prevailing economic climate. For the purposes of the analysis which follows, it is assumed that the utilities are permitted to earn returns equivalent to the average return paid over the past decade. In the case of a municipal utility, the facility would be financed entirely from bonds and no taxes would be paid. Therefore in this case $R_u = r_b$ where r_b is the interest earned on the municipal bonds issued to finance the project.

Sinking Fund.– It is assumed that the utility pays its stockholders and noteholders a uniform return on their investments during the life of the plant and returns the entire principal borrowed when the loan is retired. In order to provide for this final payment the utility must set aside a "sinking fund, " which accumulates an amount equal to the capital borrowed by the utility by the time the plant is decommissioned. If the utility can earn an amount R on the funds set aside for this purpose, an adequate sinking fund can be developed if an amount $S(R,LN)K_o$ is set aside each year where:

$$S(R,LN) = \frac{R}{(1+R)^{LN} - 1} \tag{35}$$

It is assumed in this analysis, that the rate R that the utility can earn on the funds in the sinking fund is equal to R_u.

Plant Construction. -In the equations presented *Up* **to this point, it is assumed that the capital has been paid in one sum in year t = O. utility devices,** on the other hand, may **be so** large that they require many years to construct. Investors will expect a return on their investment during the construction period even though the plant is not earning revenue. **Utilities are currently permitted to charge customers for the cost of capital tied up during construction only after the plant begins to generate power. (The allowances vary from one regulatory jurisdiction to another.) This is done by including an "allowance for interest used during con**struction" in the value of capital on which the utilities are permitted to earn a return, **For ratemaking purposes,** therefore, the **capital value of the plant (K_o) used to compute the price charged to customers includes the cost of capital up to the time that the plant enters service. If the outlays for labor and equipment during year t are called K(t) (where K(t) is given in constant dollars valued in the year the plant begins operating), the value of the plant on which a return can be earned (K_o) can be approximated as follows:**

$$K_o = \sum_{t=-N_c}^{0} K(t) \left[\frac{1+i}{1+R_u}\right]^t \tag{36}$$

where N_c is the number of years required to construct the plant.

PRICE

Using this notation, it is possible to

develop a simplified analysis of the flow of utility assets:

$$\text{OUTLAYS}(t) = K_o[PT + IN + f_b r_b + f_c r_c + f_p r_p + SR_u, LN)] + TAX(t) + (1+i)^t (M_o + M(t) + E(t)) \quad (37)$$

$$TAX(t) = T[INCOME(t) - (1+i)^t (M_o + M(t) + E(t)) - K_o(f_b r_b + PT + IN + D(a,DP,t)) - (\text{deductions from major replacements})] - K_o ITC\,\delta(t-1) \quad (38)$$

In this case PT includes ad valorem and all other taxes not based on income. Using methods described earlier it can be shown that:

$$FIX' = k_1''' K_o + \sum_{t=1}^{L} k_4'''(t) M(t) \quad (39)$$

$$k_1''' = PT + IN + \frac{R_u + S(R_u, LN)}{1-T} - \frac{(RF(R_u, L)}{1-T} \times \left[T \times DEP(a,DP,R_u) - \frac{ITC}{1+R_u}\right] \quad (40)$$

$$k_4'''(t) = \frac{CRF(R_u, L)}{1-T} \left(\frac{1+i}{1+R_u}\right)^{t_o} \left[1 - \frac{ITC}{1+R_u} - T \times DEP(a,DP,R_u)\right] \quad (41)$$

With this notation the PRICE charged by the utility for power is given by:

$$PRICE = k_1''' K_o + k_2''' E(1) + k_3''' M_o + \sum_{t=1}^{L} k_4'''(t) M(t) \quad (42)$$

where

$$k_2''' = k_2'$$
$$k_3''' = k_3'$$

Throughout this analysis it has been assumed that utilities will use the rate of return R_u to discount future cash flows. In fact, however, a recent survey of privately owned utilities conducted by Consolidated Edison Company of New York revealed that only about 20 percent of the companies surveyed used this formulation. The remainder used a rate of return which did not reduce R_u by the tax savings resulting from debt financing. This technique is used because it results in a conservative analysis of future risks. The higher discount rate places a penalty on near-term capital investments and discounts future savings more heavily.

The price charged by the utility depends on the accounting procedures required by local utility commissions. The two types most commonly used are discussed below:

NORMALIZED ACCOUNTING

Most privately owned utilities employ a procedure called "normalized" accounting. In this procedure, customers are charged a fixed price for capital in much the same way as the conventional industrial procedures discussed in the previous case. The utility is, however, permitted to charge a rate for capital as though it were depreciating its facilities using "straight-line" depreciation techniques, with the taxes actually paid based on an accelerated depreciation schedule. Since all depreciation techniques result in the same total amount of depreciation, customers end up paying the same total amount for electricity with this procedure as if the utilities charged them on the basis of the actual accelerated depreciation. This procedure, however, permits collecting more money from customers early in the plant's life and results effectively in a zero-interest loan from the customer to the utility. (These funds are used to finance new construction but cannot be included in the utility's rate base.) Accounting procedures vary and the calculations which follow are only intended to approximate the methods actually employed by utilities.

An approximation of the income resulting from normalized accounting is given by:

$$\text{INCOME}(t) = \text{FIX}' + (1+i)t\ \text{IM}_o + E(t)] \tag{43}$$

A number of simplifications have been introduced into this accounting procedure. The same capital value, K_o, is to represent several different capital quantities:

- **–The value which must eventually be *re*-paid to stockholders and bondholders and for which a sinking fund must be established,**
- **–The depreciable value of the plant for tax purposes,**
- **–The value of the plant which is eligible for investment tax credits,**
- **–The value of the plant for ratemaking purposes, and**
- **–The insured value of the plant.**

In practice, all of these values are different. For example, in most cases, actual interest outlays during construction are deducted from income taxes in the year they occur. This "interest during construction" cannot be included in the depreciable value of the plant when it enters operation and does not qualify for an investment tax credit. This value can be included in the value of the plant for ratemaking purposes, however.

Another example is the value of the land on which the plant is sited. This is part of the value of the plant for ratemaking purposes and its value must be included in the sinking fund, but land is not depreciable and cannot be used as a part of the depreciable value of the plant for tax purposes. These distinctions are not large enough to affect the results of the approximate calculations used here. The major difference between the normalized accounting approach and the standard procedure developed for unregulated industry is that the fixed capital charge (in the case of normalized accounting) does not anticipate a return on the capital accumulated from accelerated depreciation early in the plant's life.

FLOW-THROUGH ACCOUNTING

Approximately 25 percent of the utilities in the United States use a procedure by which all of a utility's costs, other than construction costs are passed directly to the consumer in the year they are incurred. With this technique, called "flow-through accounting," capital charges passed to customers will be smaller than the normalized procedure early in the plant's life (when the maximum advantages of depreciation and tax credits are permitted and are higher than the normalized charges later in a plant's life). In this case, the income each year must be sufficient to cover expenses and

$$\begin{aligned}\text{INCOME}(t) = K_o \Bigg[& [PT + IN \\ & + \frac{R_u + S(R_u, LN) - T \infty D(a, DP, t)}{(1 - T)} \Bigg] \Bigg] \\ & + (1+i)^t (M_o + E(t) - K_o \times ITC\delta(t-1) \\ & - \text{expenses for major replacements}\end{aligned} \tag{44}$$

Using this formulation of income with the annual outlays computed earlier, the levelized annual value of the total cost of energy perceived by customers is given by:

$$\text{PRICE} = k_1'''' K_o + k_2'''' E(1) + k_3'''' M_o + \sum_{t=1}^{L} k_4''''(t) M(t) \tag{45}$$

where

$$k_1'''' = PT + IN + \frac{R_u + S(R_u, LN)}{(1-T)} - \frac{CRF(d,L)}{(1-T)} \left[T \times DEP(a, DP, d) + ITC/(1+d) \right] \tag{46}$$

$$k_4''''(t) = \frac{CRF(d,L)}{1-T}\left[\frac{1+i}{1+d}\right]^t \times \left[CRF(d,N_r)[R_u + S(R_u,N_r)] - T \times DEP(a,N_r,d) - \frac{ITC}{1+d}\right] \quad (47)$$

$$k_2'''' = k_2'$$

$$k_3'''' = k_3'$$

MUNICIPAL UTILITIES

Municipal utilities typically finance 100 percent of their plants with tax-exempt bonds which in most cases can be sold with interest rates considerably below the rates charged for commercial bonds. (This advantage cannot be enjoyed if the creditworthiness of the municipality has been subject to question.) Municipals are not required to pay property taxes on their equipment, but typically make "payments in lieu of taxes" which are roughly equivalent to the amounts paid by privately owned utilities.[5] The only quantities affected are k_1 and k_4. For the case of municipal utilities, equations (40) and (41) can be written as follows:

$$k_{1m} = PT + IN + CRF(r_d, L) \quad (48)$$

$$k_{4m}(t) = CRF(r_d, L)\left(\frac{1+i}{1+r_d}\right)^t$$

[5] *The Cost of Ene gy From Utility-Owned Solar Electric Systems,* p. III-10.

BASELINE ASSUMPTIONS

In order to keep the number of variables in this study down to manageable proportions, it was necessary to fix a number of quantities at the onset. The following quantities are held constant throughout the study.

INFLATION

All costs in this study are expressed in constant 1976 dollars. To compute costs in years other than 1976, an inflation rate equal to 5.5 percent is assumed.

HOMEOWNER FINANCING

If lending institutions accept solar equip ment as having no greater risk than conventional space-conditioning equipment, or if solar devices represent only a small fraction of the total loan, the cost of solar devices can be included in the loan package financing the rest of the building, with rates of interest no different from those paid on non-solar buildings. 1n such circumstances, loans made for installing solar equipment on existing structures could be expected to cost no more than conventional market home-improvement or modernization loans.

If bankers feel that homeowners are assuming substantial risk by investing in solar equipment, loans will be more difficult to obtain or will be obtained under terms less favorable than mortages charged for other types of equipment. A recent survey indicated that in such situations lenders are not likely to raise interest rates, but will insist on a larger down payment (or smaller loan-to-value ratios). ' A similar policy would result if lenders felt that solar equipment represented a high technical risk or would be plagued by breakdowns and repair bills. It is difficult to determine the circumstances under which lenders would accept solar equipment until the technology has conclusively proven itself through operating ex-

[6] *Evaluation of Alternative Incentives for Overcoming Mortgage Market Constraints on the Commercial Acceptance and Use of Residential Solar Energy Technologies,* NSF *Grant* APR75-18360, *Interim Report, Dec 31,1975*

perience, In practice, the loan policies of individual lenders depends strongly on the credit-worthiness of individual borrowers, prevailing attitudes about the worth of various solar devices, and other intangibles,

Choosing a typical value for interest paid on home mortgages is difficult because rates have fluctuated substantially in recent years The analysis in this report assumes that an interest of 9 percent is paid on a loan covering 75 percent of the value of the house. The average interest rate paid for new homes in the United States in 1975 was 9.01 percent (including initial fees and charges), and the average loan-to-purchase-price ratio was 76.1 percent. ' It is assumed that loans made for "home improvements" will average three percentage points above the rate for new purchases.

Income Taxes

It is assumed that the purchaser of solar equipment for single family homes has a taxable income (after deductions) of approximately $18,000. Standard Federal tax tables for joint filing show taxes on incremental income at this level are paid at a rate of 28 percent. This is higher than the average U.S. income in 1976 but approximates the taxable income of owners of detached residences.

State taxes vary widely, and several States have no State income taxes of any sort. The average rate of State tax payments for an individual with an income in the range shown above is approximately 6.5 percent. [8] Thus, the total tax paid by the individual in question on incremental income is assumed to be 34.5 percent.

Property Tax

It is assumed that the homeowner pays property taxes to State and local governments at a rate of 7 percent based on an assessed valuation of 30 percent of market value. This results in a net property tax rate of 0.02 on the capital value of the house and solar equipment.[9] [10]

Insurance

It is assumed that the homeowner can insure this solar equipment at rates equivalent to ordinary property insurance which is $.25 per $100 of value.

RENTAL PROPERTIES

Statistics on the techniques used to finance rental property are difficult to assemble. Terms vary widely because of the different financial options of individual owners and investing organizations. The situation is complicated further by the fact that most buildings are financed with several notes, each with different interest rates and maturity dates. Publicly available data on the financing of rental property does not appear to have been compiled with as much thoroughness as data on single family residential debts. Some data is available from the American Council of Life Insurance, which has compiled data on loans for residential buildings with values greater than $100,000 made to owners of multifamily apartments. I n 1975, the average interest on such loans was 10.09 percent, in 1976, the average interest was 969 percent, and the rate fell to 9.33 percent in 1977 The average "loan-to-value" ratio was 75 percent. " The computations which follow will assume that in a "baseline" case, the apartment owners will finance 75 percent of the property with a loan paying 10 percent.

In some cases, apartment owners can be expected to be reluctant to broaden their investments and purchase energy-generating

---

[7] *NE W'S, Mar 19, 1976, Federal* Home Loan Bank Board, table *I*

[8] *Statistical Abstract* of *the United States,* Department of Commerce, p 268 (Note Some State taxes were approximated when only a range of va I ues for taxrates were shown)

[9] *State and Local Finances – Significant Features, AC I R 1973-74*

[10] *197.2* Council of Governments *Report*

"Statistics prepared by the American Council of Life Insurance provided to OTA by Betty Bancala (ACLA), Mar 12, 1978

equipment which they may feel is outside the conventional boundaries of their business. In an effort to isolate themselves from fluctuating energy prices and the possible effects of rent control, apartment owners have frequently avoided owning and operating even conventional energy equipment such as central boilers and air-conditioners. Separate heating and cooling units have been installed in each apartment, and the utilities bill individual customers directly. This practice is encouraged in the administration's National Energy Plan.

Expected Rate of Return

Owners of real estate must earn enough on their investment to compensate for the added risk of these ventures as compared to more secure and, in the case of apartment properties, more liquid investments. The yield on equity invested in real estate depends heavily on the income tax position of the investor, the favorability of financing, the reception of risk, and expectations about the resale value of the property. The value of real estate has increased rapidly in recent years, and a significant fraction of the "rate of return" expected from such property has come in this form. An investment company's expected return will vary widely as a result of all these variables, and a single value cannot fairly represent the market. It is necessary to examine a number of possibilities in this area, and the following discussion is intended to provide at least some direction in choosing rates of return. An analysis of returns experienced by owners of apartment, office, and retail property in the Washington, D. C., area during the period 1968-74 indicates that returns of approximately 8.5 percent (after taxes) were experienced on buildings in the range of $30 million, with smaller projects earning approximately 1 percent more.[12] In the analysis which follows it is assumed that apartment owners earn 1 O-percent returns after taxes.

It is quite possible, however, that the investors will expect higher rates of return on the incremental equity invested in solar equipment. Investing in conventional equipment to provide utility service to rental units is a necessary part of construction costs. Added funds for new energy equipment may well be perceived as a higher risk investment and be subjected to tests commonly applied in other economic sectors.

A series of interviews with organizations attempting to sell new energy equipment indicated a reasonably consistent pattern of expectations about the return from equipment such as new heat-recovery systems and heat pumps. It was felt that most investors would expect the new equipment to "pay for itself" in 4 to 5 years. This corresponds to an investment paying 15 to 20 percent returns for a period of 10 years. It is, of course crucial to understand the circumstances under which solar equipment would be considered a routine part of rental property, and the circumstances under which a large rate of return would be expected for the equipment. It is reasonable to suppose that in the early stages solar equipment would be required to provide substantial rates of return for investors.

An average debt-to-value ratio for apartment buildings has been substantially more difficult to determine. This is partly due to the fact that loan amounts are typically computed on the basis of an assumed "debt coverage ratio, " instead of on a fixed rule of-thumb for downpayments. The debt coverage ratio is defined as the ratio between the stabilized net income of the property owner and the cost of paying the mortgage. This ratio can be as low as 1.10 in cases where a long-term Government lease makes risk minimal, and it can be as high as 1.25 or more in instances where occupancy is uncertain. Conversations with several bankers and examination of recent loan packages indicate that assuming a debt-to-value ratio of 75 percent could be used as a "typical case" to represent today's market.

[12] McCloud Hodges, Real Estate Consultant, McLean, Va., private communication,

Tax Status

It is assumed that the owners of rental property have a sufficiently high enough taxable income to pay State and Federal taxes at a combined rate of 50 percent. As noted earlier, most apartments qualify for double-declining balance depreciation; it is assumed that equipment is depreciated with double-declining balances over a depreciation interval of 15 years, regardless of the actual lifetime of the equipment. Apartments do not qualify for investment tax credits on energy equipment, and none are assumed in the analysis.

Insurance and Property Taxes

Property tax and insurance rates are assumed to be identical to the rates paid by homeowners.

INDUSTRIES

It is assumed that an industry finances 30 percent of its investments in new energy equipment with debt instruments paying 10-percent interest rates.

Expected Rate of Return

As in the previous case, the rates of return expected on novel industrial equipment will depend critically on the perception of the risks involved. In general, however, industries expect to recover capital on new equipment very quickly to ensure continued competitiveness in an economic climate which may be changing rapidly. The Thermo-Electron Corporation recently surveyed a number of chemical, paper, and refining industries and concluded that 50 percent would invest in equipment if a 22-percent return on investment after taxes could be expected. (See figure 1-3.) In the following analysis, it is assumed that industries use a required rate of return of 20 percent to determine the cost of energy generated by onsite equipment.

Taxes

It is assumed that industries pay Federal and State taxes at a combined rate of 50 percent. Most industries are able to use an investment tax credit granted during the first year of a system's operation; qualifying property must be tangible, depreciable, and must have a useful life of at least 3 years.[13] The amount of the credit has fluctuated since it was first instituted, but it is currently 10 percent. This amount is assumed as the "baseline" credit for computing industrial costs.

UTILITIES

Utilities finance equipment primarily from three sources: bonds, preferred stocks, and common stocks. Statistics showing the national average of utility fund sources are shown in table 1-3.

Bonds

Bond financing is relatively inexpensive compared with other sources of capital, but there is a limit to the amount of capital which can be raised from bonds. A bond is a contract to pay a fixed amount to the holder regardless of the utility's income. A failure to pay the required interest could, in principle, lead to bankruptcy of the utility. To protect themselves, lenders require that utilities have an income sufficient to make debt payments even in times of economic hardship. The most common measure of this margin of safety is called the debt "coverage ratio, " which is defined to be the ratio of income before taxes to annual debt payments. During 1974, the average privately owned utility had a coverage ratio of 2.4. In practice, lenders maintain these coverage ratios by linking interest rates to them. Debt financing becomes prohibitively expensive or unavailable if debt service requires too great a fraction of utility income. For the purposes of this analysis, however, it is assumed that utility debt remains at the current national average of 53 percent, although utilities attempt to achieve a situation where only

[13] IRS publication 572, 1976 edition, p. 1.

Figure I-3.—Cumulative Distribution of ChemicaL Petroleum Refining, and Paper and Pulp Companies Willing To Invest in Inplant Cogeneration Equipment Versus Internal Rate of Return on Investment

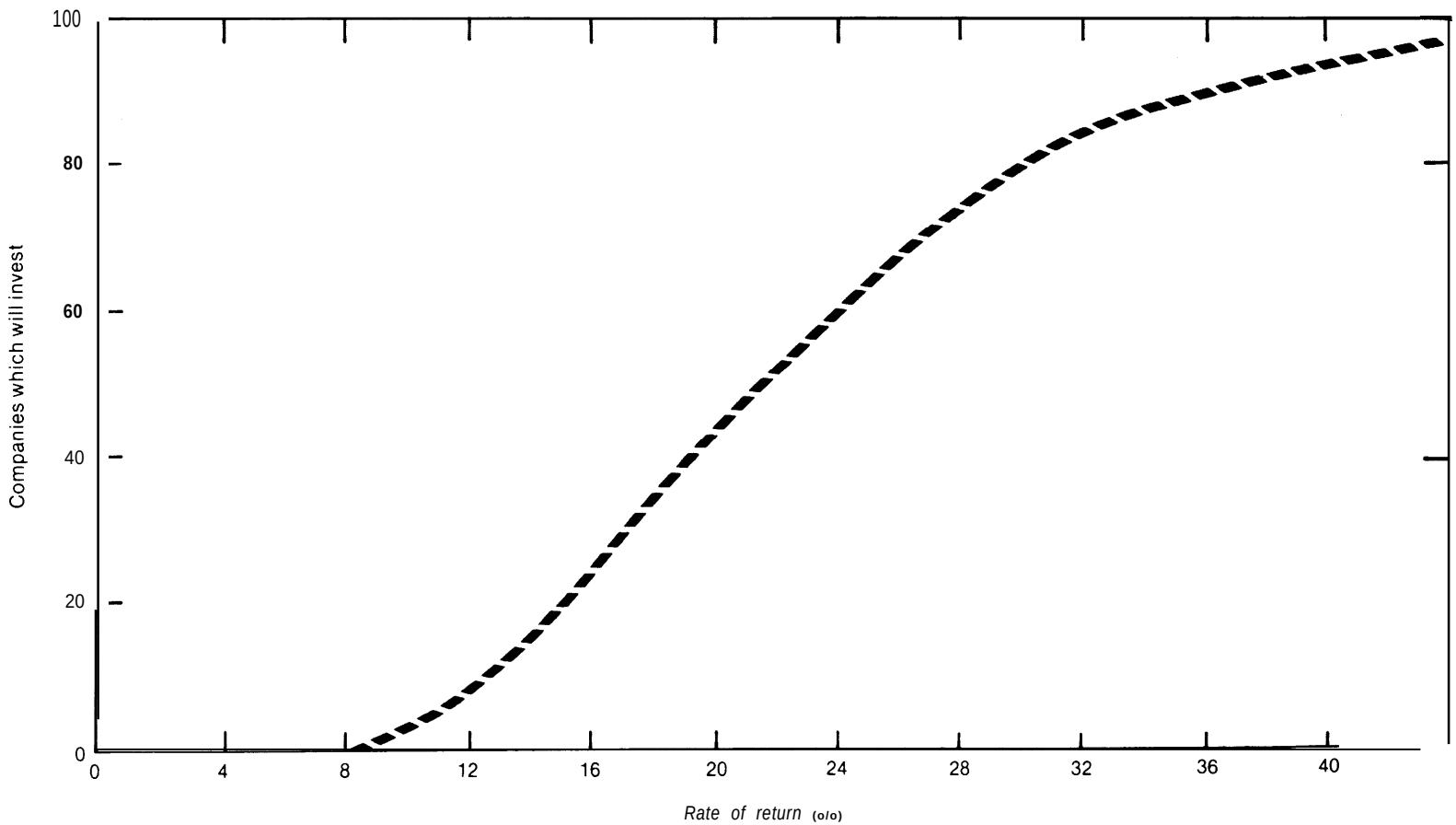

Table 1-3.—Summary of the Financing of Public-Owned Utilities in the United States 1973.74

	1974	1973
I Long-term *debt*		
A. Percentage of capitalization and retained earnings (1).	*53.0*	*52.3*
B.Average interest rate (2)	*6.3*	*5.9*
C. Average rate paid on new debt issues (4) & (5)	*8.15 (January)* 9.37 *(December)*	*7.51* (January) *8.17* (December)
D. *Times interest earned (3)*	*2.4*	*2.6*
II. Preferred stock		
A. Percentage of capitalization	12.0	12.1
B. Average dividend rate (2)	6.8	6.4
C. Average dividend rate paid on new issues (6)& (7).	7.68-11.50	7.15-8.6
III. Common stocks *and* retained *earnings*		
A. Percentage of capitalization and retained earnings (1).	*34.8*	*35.6*
B. Percentage return on common equity (3)	*10.7*	*11.5*
C. Common dividend payout ratio (3).	*70.4*	*67.9*

NOTES All references are to Statistics *of Privately Owned Electric Utilities in the United States for* 1974 *and 1973.* Published by the Federal Power Commission

(1) 1974, p XXII, (2) 1974, p XIX, (3) 1974 p XIV< (4) 1974, p XIII; (5) 1973, p XXVI; (6) 1973, p XXVIII, (7) 1974, p XVI

about 50 percent of their financing comes from bonds. (See table 1-3.)

The average double-A bonds issued for utilities during January 1974 paid 8.15 percent interest, and those issued in December paid 9.37 percent. It is assumed that the interest paid on utility bonds will be 8.5 percent. A dramatic increase in the rates paid by utilities has, **however, created a situation** where the average interest rate paid by utilities on long-term debt is far less than the cost of new debt. I n 1974, for example, the average cost of debt to public utilities was 6,3 percent. " The increase **in the cost of debt is due both to an overall increase in the cost of bonds, and that the credit ratings of many utilities have dropped in recent years due to financial difficulties in the industry. Bonds with lower ratings command higher interest rates to compensate the investors for the higher risks which they involve** In January 1975, triple-A bonds paid 8.99 percent interest, double-A bonds paid 9.45 percent, A-bonds paid 10.37 percent, and BAA-bonds paid 11.57 percent. A rate of 9 **percent is used in the analysis.**

[14] *Statistics of Privately Owned Electric Utilities in the United States,* 1975, *Federal Power* Commission, *p L, S-260*

Stocks

After raising as much of its capital requirement as it can from internally generated cash and bonds, a utility will turn to the stock market for the remainder. In general, the rate of return paid to preferred stockholders is less than that paid **for common stock, and it is therefore assumed that the utility will issue as much preferred stock as possible. Since the preferred stock is similar to a bond in that it imposes a contractual obligation on the company to pay a fixed fee at a specified time, there are limits on the amount of capital which can be raised from preferred stocks, In fact, many preferred stock issues explicitly limit** the percentage of net worth which can be raised **in this way in order to maintain an acceptable level of confidence in the reliability of preferred stock payments, Preferred stocks averaged about 12.2 percent of the total outstanding stock of publicly owned util-** *i tie: in 1973* **(see table l-l), and this fraction is assumed in the analysis. Rates paid for preferred stock have risen sharply in recent years for the same reasons, causing the rise in the price of new debt. The average return paid on preferred stock in 1974 was 6.8 percent, although new issues were sold for rates**

varying from 7.68 to 11.5 percent. A rate of 9 percent is assumed in the analysis.

Any remaining capital requirements must be met by issuing additional common stock in the company. The feasibility of doing this in a real market will depend strongly on the perceived strength of the utility at the time of issue, which will, in turn, depend on the price-earnings ratio at the time.

The average return paid on common utility stock in 1974 was 10.77 percent. This may not be an appropriate value to assume as a return, however, since 1974 was a very poor year for owners of utility stock. Table I-4 indicates the historic pattern of inflation and rates of return on utility equity.

Earnings have averaged 7 to 8 percent above inflation. Since it has been assumed that inflation will average 5.5 percent, a 13-percent return on equity is used to compute utility costs.

Taxes

It is assumed that utilities qualify for the lo-percent investment tax credit on all purchases, and that double-declining balance depreciation schedules are employed over a period of 30 years. Federal and State taxes are assumed to have a combined effective tax rate of 50 percent. Ad valorem, property taxes, and other taxes are assumed to be 2 percent per year. 's

[15]Op. cit. (ERDA/J PL-101 2-76/3).

Table I-4.–Historic Pattern of Inflation and Rates of Return on Utility Equity

	1974	1973	1972	1971	1970	1969	1968	1967	1966
Earnings available for common stock[a]	10.7	11.5	11.8	11.7	11.8	12.2	12.3	12.8	12.8
GNP deflator[b]	10.3	5.6	3.4	4.5	5.5	4.8	4.0	3.2	2.8
(Earnings)-(inflation)	0.4	5.9	8.4	7.2	6.3	7.4	8.3	9.6	10.0

[a]*Statistics of private/Owned Electric Utilities in the United States 1974*, FPC, P. XXIX.
[b]*Statistical Abstract of the United States 1975*, US. Department of Commerce, P. 416.

Chapter II

CURRENT AND PROJECTED FUEL COSTS

Chapter II- CURRENT AND PROJECTED FUEL COSTS

Page

Current Energy Prices. 27

Estimates of Future Energy Prices 30

Projections 31

Fossil Fuel Prices 34

Electricity Prices. 36

Other Projections 38

LIST OF TABLES

Table No. *page*

1. 1976 Fuel Prices. 28

2. Model's Assumed 1976 Electric Rate Structure 29

3. Simplifed Electric Rate Schedules. 29

4. Constants for Brookhaven National Laboratory Price Increase Projections. 34

LIST OF FIGURES

Figure No. *Page*

1. Actual 1976 Residential Delining Block-Rate Structure Including Fuel Adjustment. .28

Figure No. *Page*

2. 1976 Residential Electric Rate Structure Used in Model 30

3. Assumed Future Residential Natural Gas Prices, Albuquerque 32

4. Assumed Future Residential Natural Gas Prices, Boston 32

5. Assumed Future Residential Natural Gas Prices, Fort Worth 32

6. Assumed Future Residential Natural Gas Prices, Omaha. 32

7. Assumed Future Residential Heating Oil Prices, Albuquerque 33

8. Assumed Future Residential Heating Oil Prices, Boston 33

9. Assumed Future Residential Heating Oil Prices, Omaha 33

10. Assumed Residential Electriciy Rate increases, Boston 33

11. Potential Marginal Costs of Baseload Electricity in the Year 2000. 36

12. Potential Marginal Costs of Baseload Electricity in the Year 2000. 37

Chapter II

Current and Projected Fuel Costs

Anticipating the future cost of energy in the United States is an extremely uncertain undertaking. The complex industry is in rapid flux, and the past is an unreliable guide to the future. Prices will depend on:

- the cost of developing and producing domestic fuel resources;
- the price of imported fuels;
- the cost of producing synthetic fuel substitutes;
- externalities such as environmental regulations; and
- regulatory impact, both explicit and implicit.

Confident estimates in these areas simply are not possible, although a large number of the estimates can be supported. The predicted future price of fuel can have a strong influence on both private and public decisions about solar energy. Investments in solar and other conservation equipment will appear more attractive if energy prices are expected to rise sharply instead of remaining constant or increasing gradually. Public perception of future energy prices may be guided, to a large degree, by the Government's behavior on this issue. As long as the Government insists that energy prices will not rise, the public almost certainly will make decisions on this basis.

CURRENT ENERGY PRICES

The prices charged during 1976 for residential and utility fuels in the four regions examined in this study are illustrated in table II-1. It should be noted that there is a significant difference between prices paid for residential natural gas in different parts of the country ($3.18 per million Btu (MMBtu) in Boston and $1.10 per MMBtu in Kansas City in 1975), and the prices charged for utility coal ($5 per ton in Albuquerque, where access to mines is direct, and $25 per ton in Boston, where transportation costs are significant). In general, energy prices demonstrate a greater geographic variation than the total amount of sunlight available for solar installations, and the two effects may cancel each other out. In New England, for example, insolation rates are relatively low, but fuel prices are high.

The prices charged for electricity are more difficult to summarize, since most utilities charge different rates in summer and winter and use "declining block rates" to define costs in each season. The actual residential rate schedules used in each of the four cities in 1976 are plotted as a function of monthly consumption in figure I 1-1, As can be seen, electric prices vary greatly around the country.

The rates used in evaluating the cost of electricity consumed by different customers are simplified approximations of the actual prices charged. The assumed rate schedules are summarized in table 11-2, and residential rates are illustrated in figure 11-2. The schedules were prepared from the actual rates, using procedures outlined in table II-3. Different schedules were applied, as appropriate, to residences, apartments, shopping centers, and industries. Where different summer and winter rates applied, the rates were averaged by weighting each seasonal rate according to the number of months in the season. Complex rate schedules were simplified with linear approximations in some instances.

Table II-1.—1976 Fuel Prices

	Residential consumer prices incl. applicable taxes[a] *(mils/kWht)*		*Average delivered contract price at utility electric plants, January 1976*[b] *(mils/kWht)*		
Location	Natural gas	*No. 2* heating oil	*Natural* gas	*Residual fuel* oil (No. 6)	Coal
Albuquerque	*4.980 (Dallas)*	*9.893*[c] *(Mountain)*	*2.696 (New Mexico)*	*6.335 (New Mexico)*	*0.8601 (New Mexico)*
Boston	*10.87 (Boston)*	*10.40 (Boston)*	*5.669 (Vermont)*	*6.171 (Massachusetts)*	*4.239*
Fort Worth	*4.980 (Dallas)*	*Not Available (West South Central)*	*2.966 (Texas)*	*6.010 (Texas)*	*0.9010 (Texas)*
Omaha	*3.747 (Kansas City)*	*9.573*[c] *(West North Central)*	*2.365 (Nebraska)*	*5.474 (Nebraska)*	*3.276 (Nebraska)*

(Note The following *conversion factors were used. 1 therm = 2930* kWht; *1 gallon No 2* oil *= 40.64* kWht; *1* kWht *= 3413 Btu)*
[a] *Retail Prices and Indexes of Fuels and Utilities Residential Use*, Bureau of Labor Statistics, US Dept of Labor, March 1976
b Federal power Commission News *Release No.* 22363, May 19, 1976.
[c] *Monthly Energy Review FEA*, May 1976, p. 60.

Figure II.1.—Actual 1976 Residential Declining Block-Rate Structure Including Fuel Adjustment

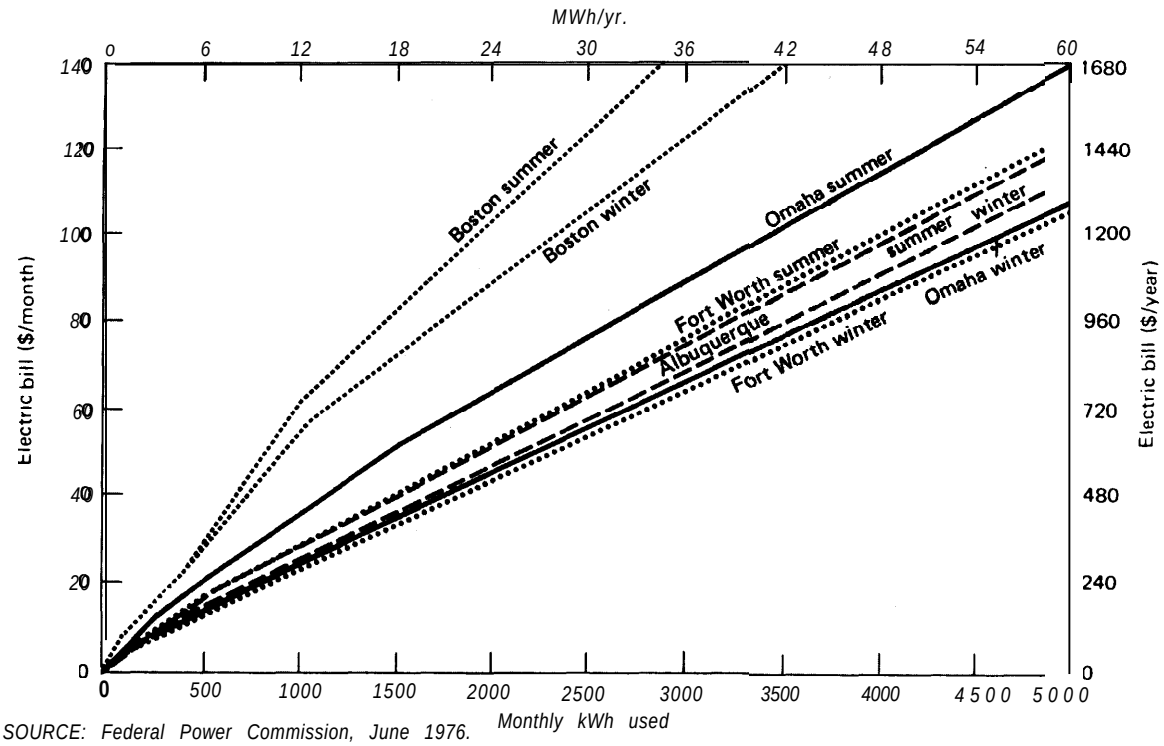

SOURCE: Federal Power Commission, June 1976.

Table II-2.—Model's Assumed 1976 Electric Rate Structures

City	Loads (see previous table)	
Albuquerque		
SFH	Bill = 1.60 + .02928 X kWh	kWh<650
	6.41 + .021876 X kWh	kWh>650
TNH, LR, HR, SC	Bill = 102.50 + .011043 X kWh	D<50
	10 + 3.85 X .011043 X kWh	D>50
Boston		
SFH, TNH	Bill = 2.23 + .0558 X kWh	kWh61000
	22.027 + .03603 X kWh	kWh>1000
LR, HR	Bill = 1.60 x No. units + .29 x D + .0629 x kWh	kWh<200 x D, and kWh<12,000
	1.60 x No. units + .41 x D + .0623 x kWh	kWh>200 x D, and kWh<12,000
	1.60 x No. units + .29 x D + .0625 X kWh	kWh<120 x D, and kWh>12,000
	1.60 x No. units + 1.838 x D + .0472 X kWh	kWh>120 X D, and kWh>12,000
SC	Bill = 82 + 3.664 X D + .03707 X kWh	D<8O0, and kWh<300
	84.44 + 3.664 X D + .02893 X kWh	D<800, and kWh>300
	3013.50 + 3.433 x D + .03707 X kWh	D>800 and kWh<300
	3015.94 + 3.433 X D + .02893 X kWh	D>800, and kWh>300
Fort Worth		
SFH	Bill = 1.69 + .0368 X kWh	kWh<200
	3.95 + .02548 X kWh	kWh>200
TNH, LR, HR, SC	D Bill = 1.65	D<8
	1.65 + 1.85 X (D-8)	D>8
	"D-500" = 0	D<500
	D – 500	D>500
	Bill = D Bill + 92.40 + .01703 x kWh	kWh<50,000 + 100 X ("0-500")
	D Bill + 943.90 + 01313 x kWh + 1.703 X ("D-500")	kWh>50,000 + 100 X ("D-600")
		kWh<100,000 + 200 X ("D-500")
	D Bill + 1600.44 + .01043 x kWh + 3.016 X ("D-500")	kWh>100,000 + 200 x ("D-500")
Omaha		
SFH	Bill = 3.91 + .0289 X kWh	kWh<800
	9.65 + .02174 X kWh	kwh>800
TNH, LR, SC	Bill = 93.88 + .0218 X kWh	kWH<7,500+ 300 x D
	147.21 + 2.13 X D + .0147 X. kWh.	kWh>7,500 + 300 X D

Source Off Ice of Technology Assessment

Table n-3.-Simplified Electric Rate Schedules

City (electrlc utility)	Fuel adjustment (mils/kWh)	Actual electric rate schedules from which simplified schedules are developed for each case modeled (Effective date)				
		Single family house (SFH)	8 Unit townhouse (TNH)	36 Unit low rise (LR)	196 Unit high rise (HR)	Shopping center (Se)
Albuquerque (Publicc Service Company of New Mexico)	3.043	Schedule #I residential service (May 23, 1975)	Schedule #3 general power service (May 23, 1975)	No. 3	No. 3	No. 3
Boston (Boston Edison Company)	19.1	Residence rate B (Oct. 17, 1975)	Rate B	Apartment house rate C (Oct. 17, 1975)	Rate C	General service rate (Oct. 17 1975)
Fort Worth (Texas Electric Service Co.)	2.13	Rate R residential service (Dec. 3, 1975)	Rate G general service	Rate G	Rate G	Rate G
Omaha (Omaha Public Power District)	2.07	Schedule #10 residential service (March 1, 1976)	Schedule #30 general service (March 1, 1976)	No. 30	No. 30	No 30

RawDataSupplied by FPC Bureau of Power June 1976

Figure II-2.—1976 Residential Electric Rate Structure Used in Model

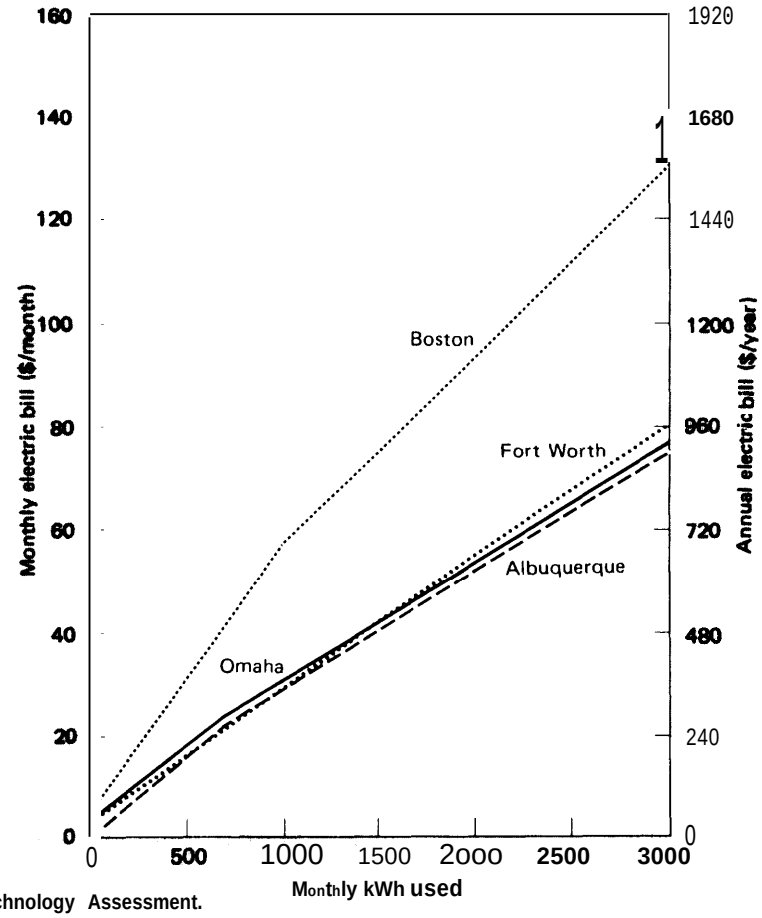

SOURCE: Office of Technology Assessment.

ESTIMATES OF FUTURE ENERGY PRICES

As indicated, methods to project future energy prices are quite inexact. A variety of organizations have published estimates of the future prices of energy and, as may be expected, the results vary greatly. As a result, rather than relying on a simple projection to provide a set of energy prices for comparison, a range of estimates has been used. These include:

1. no increase in energy prices in constant dollars;
2. residential energy price projections generated by Brookhaven National Laboratory (BNL); and
3. a projection chosen arbitrarily higher than the BNL forecast.

The results of these estimates are illustrated in figures II-3 through II-10 for the four cities examined. This set is used to demonstrate the sensitivity of price in the analysis. It is intended not to represent most probable future energy prices, but a set of projections representing several plausible forecasts of future energy prices. The choice of these bounds is explained below, along with a description of how the curves were obtained.

The Brook haven National Laboratory (BNL) is responsible for preparing the Department of Energy's (DOE) projections of future energy prices. However, because the Federal Energy Administration (FEA) had responsibility for setting "near-term" energy policy, the Brook haven modelers were required to use FEA's energy price projections through the year 1985. The BNL projections used here were received in July 1976, and at the time were BNL's "baseline" (high nuclear power) residential energy price projections. ' There is no single "standard" set of BNL energy price projections, as a number of scenarios with different assumptions about the future have been run and have yielded differing results. Furthermore, BNL is constantly updating its energy price projections as new data become available. [3]

Even DOE's energy price forecasters admit that al l forecasts are necessarily speculative. However, the more sophisticated forecasters, such as BNL, take their initial guesses and run them in supply/demand models to see if the resulting mix of fuels looks "reason able." If the initial guess results in an unlikely mix of fuels being burned (all natural gas and no oil or coal, for example), the future energy price guesses are revised and the model is run again. This process is repeated until they have a "reason able-looking" set of future energy price guesses which result in a "reasonable-looking" future energy use mix. ' The result of these analyses is a set of energy price ratios indicating the growth in energy prices as a function of the current price of energy.

BNL concurred that:

1. **The exponential curve fit (described below) is an acceptable way of extrapolating their energy price ratios to beyond the year 2000.**
2. **Applying these price ratios to actual 1976 prices of energy in various regions of the country is an acceptable way of projecting future energy prices in each location.**
3. **Applying the corresponding residential** price ratio to 1976 prices of commercial and utility fuels is an acceptable way of projecting these energy prices.[5]

Figures II-3 through II-10 illustrate the BNL energy price projections through the year 2000 for residential natural gas, residential heating oil, and residential electricity in Albuquerque, N. Mex., Boston, Mass., Fort Worth, Tex., and Omaha, Nebr.

PROJECTIONS

High Projection.—The BNL projections indicate a relatively modest increase in energy prices over the next few decades. It is possible, however, that the price of energy may reach levels higher than those shown in the BNL projections as a result of shortages and the higher cost of producing new sources. Given the large number of uncertainties surrounding estimates, it is impossible to accurately quantify either of these effects. In addition, a tax on energy could also raise the price. A high price ceiling for energy, was chosen and it was assumed for this scenario that current prices rise gradually to stable prices at these high levels.

This price behavior is determined by assuming that energy prices rise to the stable level PRICE (∞) according to the following formula:

$$\mathrm{PRICE}(t) = \mathrm{PRICE}(\infty) \times \left(1 - \exp \frac{t_o - t}{T_r}\right) \qquad (1)$$

where PRICE(t) is the energy price in year t, and T_r is a time constant* indicating the speed with which the price approaches the final threshold. The BNL data were fitted to

[1]Residential **energy price projections from** BNL supplied **by Eric** Hirst, **Oak Ridge National Laboratory,** July 1976

[2]D Behling (BNL), private *communication*, July *19, 1976*

[3]Ibid

[4]**M** Beller (BNL), **private communication,** July **19, 1976**

[5]D Behling (BNL), *op* cit

The time constant* (T_r) *of 283* **years for the three high projections, is **a reasonable choice since it is close to the typical lifetime of generating plants, mines, oil- pumping rigs, etc**

Figure II-3.—Assumed Future Residential Natural Gas Prices

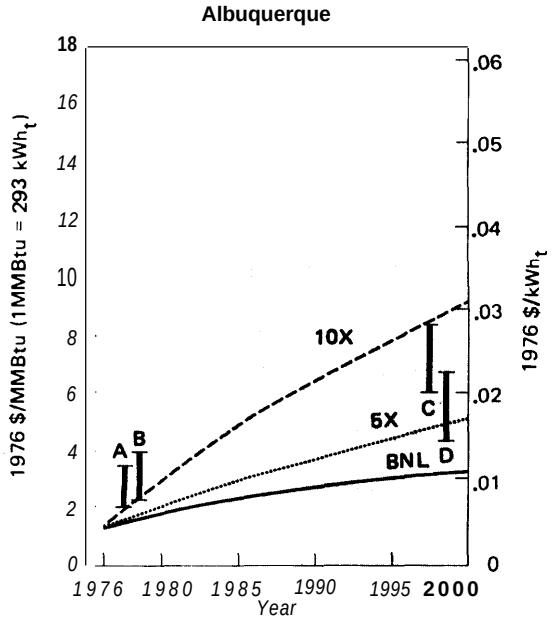

A. Unregulated natural gas in 1976
B. LNG in 1976
C. Synthetic gas from coal @ $40/ton
D. Synthetic gas from coal @ $20/ton

SOURCE: Office of Technology Assessment.

Figure n-4.-Assumed Future Residential Natural Gas Prices

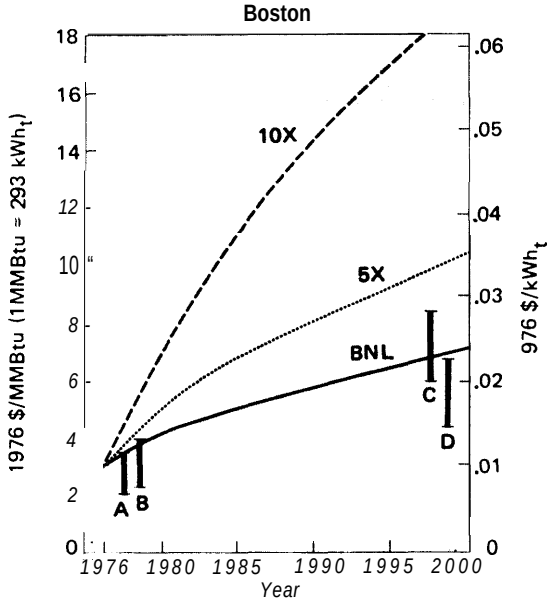

A. Unregulated natural gas in 1976
B. LNG in 1976
C. Synthetic gas from coal @ $40/ton
D. Synthetic gas from coal @ $20/ton

SOURCE: Office of Technology Assessment.

Figure II-5.—Assumed Future Residential Natural Gas Prices

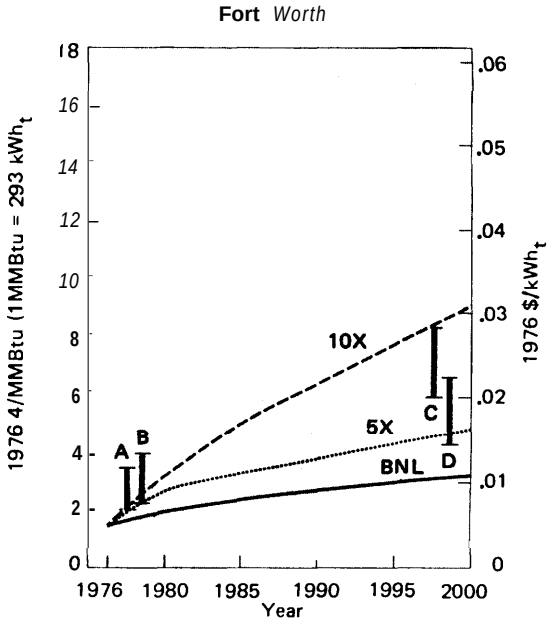

A. Unregulated natural gas in 1976
B. LNG in 1976
C. Synthetic gas from coal @ $40/ton
D. Synthetic gas from coal @ $20/ton

SOURCE: Office of Technology Assessment.

Figure II-6.—Assumed Future Residential Natural Gas Prices

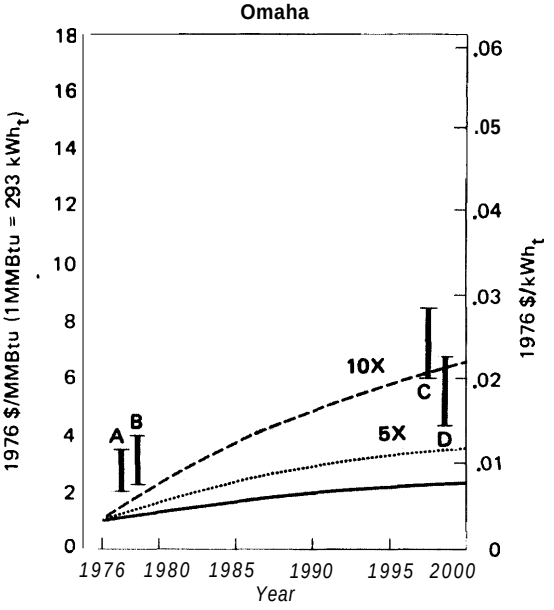

A. Unregulated natural gas in 1976
B. LNG in 1976
C. Synthetic gas from coal @ $40/ton
D. Synthetic gas from coal @ $20/ton

SOURCE: Office of Technology Assessment.

Figure II-7.—Assumed Future Residential Heating Oil Prices

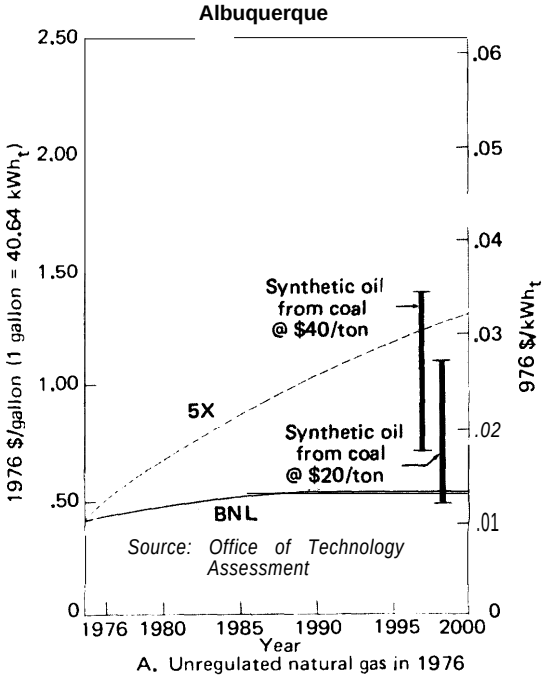

Figure II-8.—Assumed Future Residential Heating Oil Prices

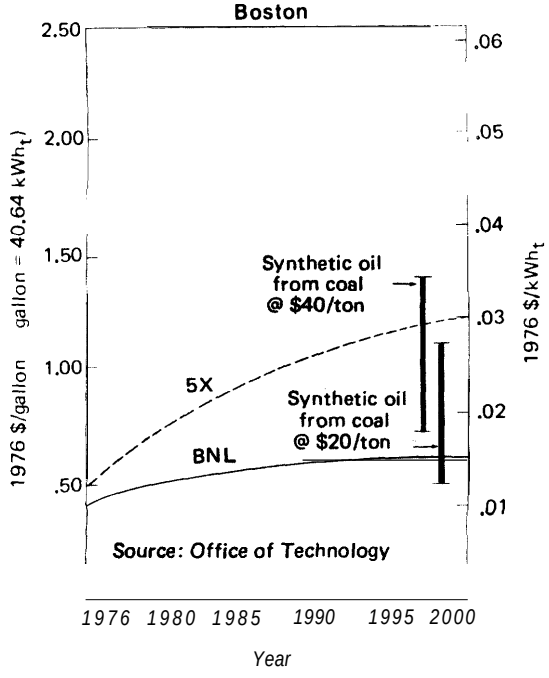

Figure II-9.—Assumed Future Residential Heating Oil Prices

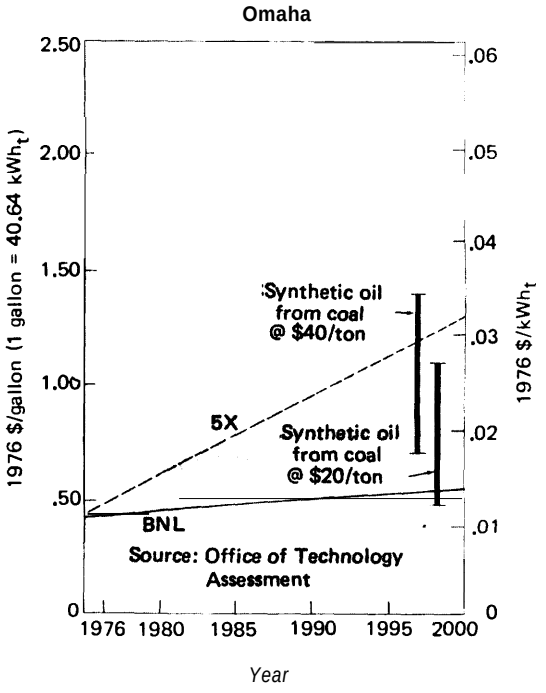

Figure II-10.—Assumed Residential Electricity Rate Increases

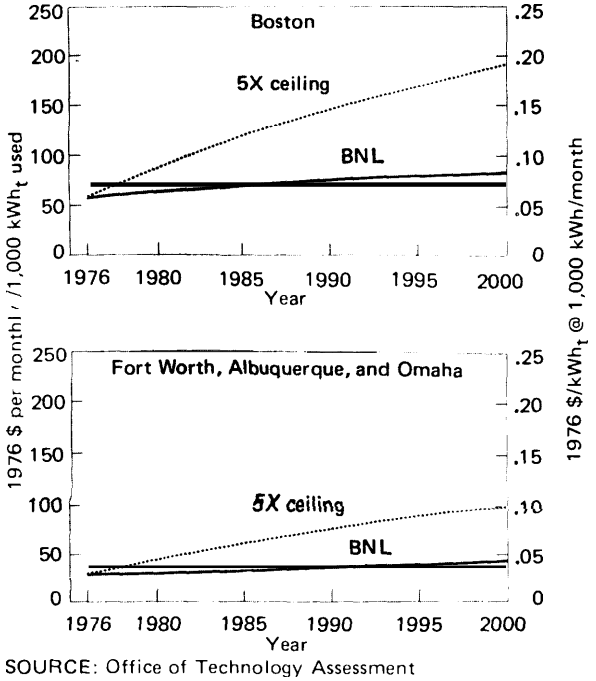

SOURCE: Office of Technology Assessment

this curve, and the results shown in table 11-4. The table also shows constants chosen to yield prices higher than the BNL projections.

Table n-4.-Constants for Brookhaven National Laboratory Price Increase Projections*

	PRICE (m) / PRICE (1976)	t_o	T_r
BNL electricity	1.62	1952.8	28.334
BNL gas	2.89	1965.7	24.334
BNL oil	1.71	1951.2	28.334
2x cost projection	2.00	1956.4	28.334
5x cost projection	5.00	1979.7	28.334
10x cost projection	10.00	1973.0	28.334

"These constants are defined in equation (1) in the text. The price ratio shown in the first column is the constant dollar ratio between an assumed future 'stable" price of energy of the type shown and the price paid in 1976

For the purposes of this study, the five-times-cost (5 x) projection was chosen. A discussion of the factors making up the cost of the principal energy sources follows this section to demonstrate the plausibility at the 5 x projection.

FOSSIL FUEL PRICES

Natural Gas

Current natural gas prices in most of the country are a result of Federal and State regulatory actions, which control the price from the wellhead to the ultimate user. The large cost variations between localities, as evidenced by comparing Boston and Omaha, result from the differences in transportation costs and the volume of supplemental gas resources (propane-air mixture, synthetic natural gas from petroleum products, and liquefied natural gas) that must be used to meet demand. These latter supplies are only partially price regulated, and their costs to the gas distributor more nearly reflect the real incremental costs of new supplies. However, these costs are averaged with that of flowing gas so the ultimate user does not see this incremental price. Current regulated gas prices range from about $0.20 to $1.49 per million Btu (MMBtu) at the wellhead and from about $1.85 to $4.70 per MMBtu (1976 prices) delivered to residences, depending on when the gas was dedicated to the interstate market.[6] In some parts of the country (the intrastate market), natural gas prices are not regulated and new contract gas sells for about $1.00 to $2.00 per MMBtu at the wellhead. ' The average price of natural gas to residences in the intrastate market area is about $2.35 per MMBtu. [8] Future gas prices will be determined by the costs of bringing in new reserves as existing fields are depleted, developing synthetic natural gas from coal and liquids, and providing imported liquefied natural gas. Although precise estimates for 1985 and 2000 are not possible at present, arguments can be made which show that the range chosen is reasonable.

Gas from new reserves in the interstate market was priced by the Federal Energy Regulatory Commission (formerly the Federal Power Commission) at $1.45 per MCF at the wellhead in 1977. However, as previously stated, new gas at the wellhead is selling for up to $2.00 per MMBtu where not regulated. Synthetic natural gas (SNG) from petroleum products (naphtha and propane) is currently priced at anywhere from $3.00 to $4.20 per MMBtu at the plant gate. Although no plants to produce synthetic gas from coal have been built, estimates are that gas from such plants will cost from $4.00 to $6.00 per MMBtu ($4.50 to $7.50 per MMBtu delivered to residences) if coal costs $20.00 per ton. [9 10] If the cost of coal doubled to $40.00 per ton, SNG prices would increase by approximately $1.50 per MMBtu resulting in a delivered residential price of

---

'Quarter/y Report of Gas Industry Operations, American Gas Association, Third Quarter, 1977.

'Federal Energy Regulatory Commission, News Release FE-69, Nov. 24,1977.

[8] *Quarterly Report of Gas Industry Operations,* op cit

'*Gas Supply Review,* American Gas Association, vol. 5, January 1977, pp 9-10.

'"Richard A. Tybout, *Public Utilities Fortnight/y, VOI 99, Mar.* 31, 1977, p 17.

$6.00 to $9.00 per MMBtu. The current price of gas imported as a liquid in cryogenic tankers (liquefied natural gas or LNG) ranges from about $1.75 to $2.90 per MMBtu delivered to the pipeline.[11] Although the above prices, which are indicative of the marginal costs of new supplies, are presently rolled into the cost of flowing gas from existing wells, the total price will more nearly equal the marginal cost as the latter depletes.

When transportation and distribution costs (about $0.50 to $1.50 per MMBtu) are added to the above prices, the result is a range of marginal prices from $2.25 to $9.00 per MMBtu. Although these are current prices, the upper end of the range already reaches or exceeds the 5 x ceiling prices in the year 2000 for all cities except Boston (see figure II-4). As stated earlier, a considerable portion of Boston's gas is made up of supplemental supplies, and current prices there are much closer to marginal cost of new supplies. However, if synthetic natural gas (SNG) from coal is included, an upper price of $9.00 per MMBtu (delivered) is obtainable, which approximates the 5 x ceiling price in Boston in the year 2000. It appears that the set of 5 x ceiling curves for natural gas is at least plausible.

Oil

A similar analysis can be developed for oil. The present average price of domestic oil is about $1.50 per MMBtu ($8.75 per barrel) at the well head.[12] Uncontrolled oil is about $2.40 per MMBtu and imported oil costs about $2.25 to $2.60 per MMBtu.[13] Residential heating oil currently costs about $3.35 per MMBtu delivered ($0.46 per gallon), This is about 30 percent above the price of crude oil, reflecting the costs of refining, transporting, and distributing the fuel oil.

Future oil and gas prices will depend on the cost of producing and transporting hydrocarbons from new sources and decisions made by petroleum exporting nations. The present price charged for oil from domestic sources can be approximated by the price of uncontrolled oil, $2.35 per mill ion Btu, [t has been estimated that oil produced from advanced recovery techniques at existing sites may cost as much as $4.30 per million Btu ($25 per barrel) before the supply of oil from these resources begins to fall rapidly.[14] The cost of imported oil will probably be the largest factor in determining oil price over the next 10 to 15 years. Although there is no way to be certain that these prices will continue to increase from their present levels of $2.25 per MMBtu, the continuing growth of world demand and the likely peak in production around 1990 make it improbable that prices will fall. Prices for oil produced from coal and oil shale can only be approximated, as no operating plants exist. As with SNG, these prices are subject to considerable uncertainty. In an analysis performed by ERDA (now DOE) in March 1976, shale oil prices of $2.50 per MMBtu were obtained. However, this study indicated that estimates of $3.25 per MMBtu had been made by others. The report also noted that their calculation could range as high as $4.00 per MMBtu, depending on financing assumptions.[15] Oil from coal was not estimated in the study, but the similarity between these processes and production of SNG from coal allows the same price range ($4.00 to $6.00 per MMBtu) to apply.

The price of delivered residential heating oil is presently about 30 percent higher than crude oil. The range of costs quoted above, $2.25 to $6.00 per MMBtu, is therefore equivalent to $3.15 to $8.00 per MM Btu, or $0,45 to $1.10 per gallon for delivered residential heating oil. These prices bracket the 5 x ceiling price in the year 2000 for all of the cities (see figures I I-7 through 11-9) in

[11] *Gas Supply Review,* American Gas Association, VOI 5, February 1977, pp 10-11

[12] Monthly *Energy Review,* DOE, November 1977, p 72

[13] Ibid, pp 72, 76

[14] *Enhanced Oil Recovery in the United States,* Office of Technology Assessment, U S Congress, Washington, D C., January 1978.

[15] *Proposed Synthetic Fuels* Corn mere *ial Demonstration Program: Fact Book,* ERDA, Washington, D C , March 1976

question, even before any real increase between now and 2000 is taken into account. The plausibility of this 5 x ceiling again appears justified.

Coal

The price of coal varies enormously around the country depending on the distance over which the coal must be shipped, heat content, and sulfur content (which determines the amount of pollution which will be released by burning), and a variety of other factors which determine its burning properties. Contract prices paid for coal by utilities vary from about $4.00 per ton in North Dakota to nearly $40.00 per ton in New Jersey. "

Future prices will depend both on the extent to which the price of coal rises to meet the increasing price of competing fuels, and the extent to which environmental restrictions are imposed. If utilities are allowed to use western coal without flue gas desulfurization (FGD) technologies to meet air quality standards, the average price of coal would be lower than if they used eastern coal and FGD devices. Estimates are that sulfur cleanup will add as much as $0.60 per MMBtu to the price of coal. [17]

Based on this and on current coal prices, a range of $1.00 to $2.50 per MMBtu is not unreasonable. It should be noted that no coal prices as such are included in the price projections in figures II-3 through II-10. Coal will show up in the price of electricity as it has already appeared with respect to synthetic gas and oil. The sensitivity of electricity prices to coal prices will be discussed in more detail below.

ELECTRICITY PRICES

The two major components of electricity prices are the cost of fuel and the capital cost of the powerplant. The relative significance of either depends on the fuel used. Fuel costs are much more significant for oil-fired plants than that for coal or nuclear, since oil is two to five times more expensive on a Btu basis. The interaction between these two factors is shown in figures II-11 and II-12 which show the cost of electricity sold at the generating plant (busbar cost) and the average electricity sales price, delivered to the customer, as a function of the following variables:

- the installed cost of the generating facility in dollars per kw;
- the cost of fuel burned in the facility (coal, oil, or gas); and
- the "capacity factor, " defined as the average percentage use of the facility's capacity.

Figure II.11 .—Potential Marginal Costs of Baseload Electricity in the Year 2000 (75 Percent Load Factor)

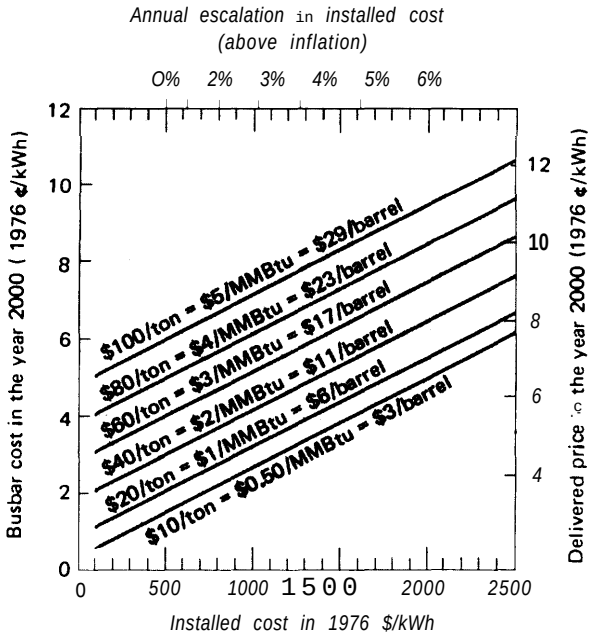

Assumptions
- *–75% load factor*
- *–1976 Installed cost $500/kWh*
- *–35% efficiency in generation and transmission*
- *–Transmission and distribution cost $300 to $400/kWh*
- *–Operating costs (exclusive of fuel) = $0.01/kWh*
- *–Capital cost 0.15*

SOURCE: Office of Technology Assessment,

[16] *Annual Summary of Cost and Quality of Steam-Electric Plant Fuels, 1976,* Staff Report by the Bureau of Power, Federal Power Commission, May 1977

[17] National *Energy Outlook,* **Federal Energy Administration, February 1976, p F-6**

Figure II-12.— Potential Marginal Costs of Baseload Electricity in the Year 2000
(50 Percent Load Factor)

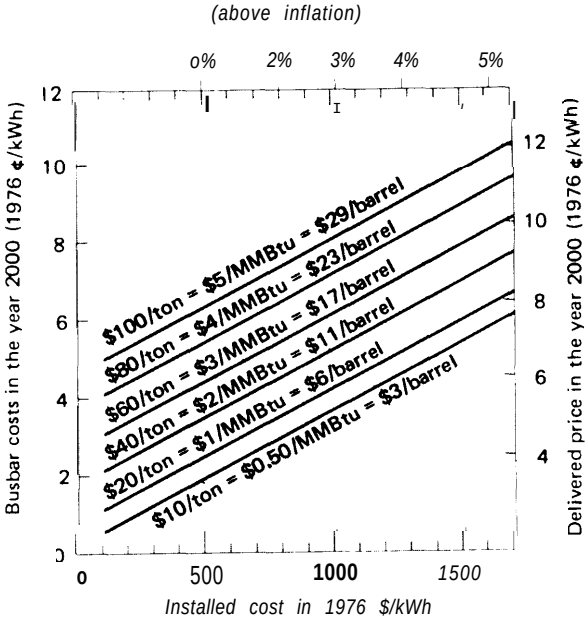

Assumptions
- *–50% load factor* *–1976 installed cost $500/kWh*
- *35% efficiency in generation and transmission*
- *–Transmission and distribution cost $300 to $400/kWh*
- *–Operation*
- *–Operation*
- *–Operating costs (exclusive of fuel) $0.01/kwh*
- *–Capital cost 0.15*

SOURCE: Office of Technology Assessment.

In all cases it has been assumed that the plant is 35 percent efficient (including all **losses in transmission and distribution). The delivered electricity costs includes, among other factors, the cost of building and operating a network of transmission and distribution lines**

Coal Powerplants

Coal-fired plants presently on order cost about $500 per **kW, including flue gas desulfurization devices.** [8] **Using present utility coal prices of about $1.00 per MMBtu ($20.00 per ton) and a capacity factor of 75 percent, a delivered electricity price of about $0.035 per kWh results from figure 11-11. It must be noted that this is the cost of baseload electric power, i.e., that produced by a large plant operating at a capacity factor of about 75 percent.**

Utility loads fluctuate, however, and about 30 percent of the total electricity gen**crated will need to come from facilities which can adjust their output rapidly (on the order of minutes to hours) to meet these fluctuations. These are typically smaller steam turbines (less than 100kW), combustion turbines, diesel engines, or hydroelectric storage systems, and are relatively expensive to operate. The cost of this intermediate and peak load electricity is about 1.35 to 3 times that of baseload electricity. " The total cost of electricity is the weighted average of the base, intermediate, and peak-load electricity, and is about 40 percent higher than the baseload price. Therefore, $0.035** per kwh for baseload must be adjusted **for a total cost to the customer of about $0.049** per kWh. A further adjustment is needed, **since the rates to different classes of** customers are not the same. I **n 1975, residential customers paid about** *15* **percent more per kWh** than the average to all customers. 20

The future price of electricity will depend on the escalation rate of powerplant capital costs and fuel. For example, it can be seen from figure 11-11 that a 3-percent-per-year escalation rate, above inflation, will cause a $500 per kw plant to cost $1,000 per kW by the year 2000. If this is coupled with a real price rise in coal from $1.00 to $2.00 per MMBtu, the delivered cost of baseload electricity becomes $0.057 per kWh.

Applying these adjustments produces a total marginal **cost in** the year 2000 of **$0.092 per kwh delivered to a residential customer. Previous discussion has already shown this coal price to be plausible (it is**

[18] *The Economic and Social Costs of Coal and Nuclear Electric Generation,* **National Science** Foundation, **Washington, D C , March 1976, p 12**

191977 *National* Energy Outlook, (Draft), Federal Energy Administration, Washington, D C , *January* 1977, Appendix C, p. 19.

[20] *Statistical Yearbook* of *the Electric Utilit y Industry,* **Edison Electric Institute, New York, N Y., October 1976, p. 54.**

being paid by some utilities today). There are no generally accepted estimates at this time for the projected capital cost increase. The actual rate will have a substantial effect on electricity prices from coal-fired plants and is, therefore, one of the major uncertainties in assessing the relative economics of alternative energy systems.

Nuclear Powerplants

Another major uncertainty is associated with the cost of nuclear-generated electricity. The possible changes in plant capital costs are even more crucial in this instance because fuel costs do not contribute as significantly as in the case of coal. The many studies on the relative marginal costs of new nuclear and coal-fired electricity have reached no definitive conclusion. It is likely that percentage changes in capital costs will be similar for both coal-fired and nuclear plants, since the largest component is the construction cost, which is relatively independent of the type of plant built. As a result, nuclear costs will be more affected by capital cost escalations because nuclear power is more capital-intensive.

Another controlling item in the relative costs is the relative fuel costs and the associated environmental and safety features peculiar to each fuel cycle. This means that if nuclear electricity prices are to be significantly lower than the $0.092 per kWh previously calculated, assuming a 3-percent real increase in capital costs, the price of nuclear fuel must not increase significantly. However, present knowledge about moderately priced U_3O_8 resources and serious problems in developing a breeder reactor make it likely that nuclear fuel prices will continue to climb.

With regard to electricity, the 5 *x* ceiling curve loses plausibility only if electricity prices remain near their present marginal costs. This means either no significant real increase in capital costs (below 3 percent) or the continuation or decrease (to compensate for any rise in capital costs above 3 percent) of present fuel costs Again, it is not known what will occur in this context, but the fact that there are major uncertainties means that the 5 *x* ceiling cannot be precluded.

OTHER PROJECTIONS

InterTechnology Corporation.–Several other price projections have appeared recently, in addition to those quoted above. To complete this discussion, a review of these are given for comparison. In a report on the economic potential of solar thermal energy to provide industrial process heat, InterTechnology Corporation assumed a series of real escalation rates to obtain price estimates for the year 2000 of $2. I 4 per MMBtu for coal, $9.20 per MMBtu for oil (approximately $1.25 per gallon for delivered fuel oil), and $8.02 per MMBtu for natural gas, all in 1976 dollars. [21] The latter two are equal to or greater than the 5 *x* ceiling price used in this study. The coal costs correspond to coal at $43 per ton which, if coupled with plant capital costs of $1,000 per kW, produce residential electricity of about $0.093 per kWh.

Battelle Columbus Laboratories.–In a similar study, Battelle Columbus Laboratories came up with estimates for the year 2000 of $4.00 to $6.00 per MMBtu for natural gas, $5.00 to $6,50 per MMBtu ($0.70 to $0.90 per gallon) for residential home heating oil, and $1.50 to $2.50 per MMBtu ($30 to $50 per ton) for coal delivered to utilities. " Except for natural gas in Boston, these prices also bracket the estimated oil and natural gas prices in the year 2000 from the 5 *x* ceiling.

Federal Power Commission (FPC).-In a report by the Bureau of Natural Gas of the FPC (now the Federal Energy Regulatory Commission (FE RC)), energy prices delivered to residences of $4.16 per MMBtu for natural gas, $3.58 per MMBtu for fuel oil

[21] *Analysis of the Economic Potential of Solar Therma/ Energy to Provide Industrial Process t/eat,* Inter-Technology Corporation, Warrenton, Va , February 1977

[22] *Survey of the Applications of Solar Thermal Energy Systems to Industrial Process Heat,* Battelle Columbus Laboratories, Columbus, Ohio, January 1977

($0.050 per gallon) and $0.035 per kWh for electricity (all in 1976 dollars) were projected for the year 2000.[23] These are national averages, and no means to allocate them by region was given. It is not likely however, that regional adjustments would bring the prices near the 5 x ceiling in any of the four cities under consideration. These projections assume that all crude oil prices will remain at the present level of imported crude, $2.32 per MM Btu. Any increase in this price will cause a corresponding increase in the other prices.

[23] *The Future of Natural Gas" Economic Myths, Regu/a tory Rea lities, Federa l Power* Corn m ission, Bureau of Natural Gas, November 1976

Federal Energy Administration (FEA).–A final set of price projections is that developed by FEA (now DOE) in the draft of the 7977 National Energy Outlook.[24] Although only estimated to 1985, they can still be used for comparison to that date. Their results (in 1976 dollars) are $3.72 per MM Btu for fuel oil ($0.52 per gallon), $2.78 per MMBtu for natural gas, and $0.049 per kWh for electricity. These prices are based on imported crude oil prices of $2.25 per MMBtu, and are those delivered to residential customers. In nearly all cases these are close to the 5 x ceiling curve.

[24] 1977 *National Energy Outlook,* (Draft), Federal Energy Administration, Washington, D C , January 1977, Appendix C, p 19,

Chapter III

CALCULATION OF BACKUP REQUIREMENTS

Chapter III.- CALCULATION OF BACKUP REQUIREMENTS

Page

Control Strategies for Cogeneration Systems.. 43
Cogeneration System With Electric Backup .46
Cogeneration With Fossil Fuel or Biomass Backup 51
A Computer Analysis of Cogeneration 52
Calculation of Collector Performance 52
Appendix Ill-A-Proof of Valve Opening Sequence 65
Appendix hi-B-Computer Program Listings ..66

LIST OF TABLES

Table No. Page

1. Sample Input 53
2. Sample Output 54

LIST OF FIGURES

Figure No. Page

1. The Problem. 44
2. Simplified System Diagram 45
3. Cogeneration System With Grid Backup ...47
4. Cogeneration System With Fossil Fuel Backup 52
5. Entries to Collector Subroutines COLL1, COLL2, and COLL3 56
6. Flow Diagram for Entry Point No. 1 to COLL1, COLL2, and COLL3 56
7. Flow Diagram to Computing Hourly Collector Output Using COLL1 58
8. Flow Diagram for Computing Hourly Collector Output Using COLL2. 60
9. Sectional View of Parabolic Trough Collectors for Shading Computation 61
10. Typical Collector Efficiency Curve 63
11. Flow Diagram for Computing Hourly Output of a Heliostat Field 64

Chapter III

Calculation of Backup Requirements

The calculations presented in the previous chapter required an analysis of conventional and solar energy equipment operating in real environments. The techniques used to perform such an analysis were discussed generically *in previous chapters.* **The following discussion reviews the analytical method in some detail. The Fortran programs used to perform the calculations reported elsewhere** in this study are based on the methods described in this chapter and are reproduced in full in appendix III-B.

The analysis of system performance requires three basic steps:

1. Determine the onsite energy demand of the building (In the case of residences, this includes heating, cooling, hot water, and miscellaneous electrical demands.)
2. Determine the out put of solar collectors.
3. Determine the fraction of the on site energy demand that can be met from solar energy directly or from storage and the fraction that must be supplied from external energy sources (utility electricity, gas, or oil).

These three steps were performed for each hour of the year using measurements of the air temperature and available sunlight recorded during 1962 (1963 in the case of Boston). The calculation of the heating and cooling requirements of buildings **was** based on: the external temperature; an assumed pattern of occupancy and appliance use; and, assumed thermodynamic characteristics of the buildings. A program (E-cube) developed by the American Gas Association was used to convert the weather data and building descriptions into an hourly estimate of the demand for heating and cooling. Chapter V discusses the assumptions made about the buildings, and the assumptions made about patterns of occupancy, appliance usage, hot water demands, etc.

The performance of collectors was discussed generically in chapter VIII of the first volume and the methods actually used in the analysis are discussed in the final section of this chapter.

A critical question in the operation of a solar energy system is the amount of backup energy required and the pattern of this backup demand. Assessing the performance of an integrated system is a complex problem, however, and techniques have not yet been developed for optimizing the performance of such systems. The next few pages discuss techniques for approximating the optimum performance of several tyyes of solar cogeneration systems including the optimum operation of Possible combinations Of storage equipment.

CONTROL STRATEGIES FOR COGENERATION SYSTEMS

Minimizing the energy required to operate both solar and fossil-fired cogeneration or total energy systems requires a careful control strategy. For example, it is necessary to: 1) optimally allocate the space-conditioning load between electrically powered **heating or cooling equipment and heat-driven equipment (e.g., electric versus absorption chilling for heat pumps versus direct heating); 2) determine the optimum ratio between thermal energy and electric energy produced by the cogeneration**

engines; 3) determine the best strategy for charging and discharging storage; and 4) determine the best strategy for buying energy from or selling energy to an electric utility or other backup power source. (Optimizing this last choice requires considering how the cogeneration strategy affects costs everywhere in the utility, which is a much more complex problem than the one addressed here.) In general, the more flexible the system, the less backup the system will require since complex controls can ensure that the system is operated as close as possible to the thermodynamic optimum for providing the necessary work. Greater flexibility and sophistication of controls often mean an increase in system costs, and the economic merits of these control systems will need to be determined on a case-by-case basis. The problem of optimizing system designs and control strategies taking full account of all of the real choices and constraints has not been fully solved. All that is offered here is a reasonable technique for approaching an optimum allocation, More work needs to be done in this area.

The following discussion presents algorithms for minimizing fuel use for a variety of different types of equipment. In most cases, controls for providing the kind of switching called for in the calculations are not now available; however, there is no reason to believe that such controls could not be developed if a demand for the systems emerged. Control systems can probably be manufactured quite inexpensively using modern electronics. Unfortunately, the control systems used on contemporary cogeneration systems have been relatively primitive, and there are few standardized designs.

Figure III-1 illustrates the general problem. Energy enters from three sources: 1) high-temperature heat from a solar collector, 2) high-temperature heat from fossil fuel available as backup, and 3) electricity used as a backup. Three kinds of energy demands must be met: 1) demands that can only be met electrically (e. g., artificial lighting), which is called EEE; 2) demands that can be met either with electrical equipment or with thermal energy (e.g., refrigeration can be achieved with an electrically driven compressor or with thermally driven absorption equipment, and space heating can be achieved using thermal energy directly or with electric heating), which is called QSH; and, 3) loads that can be best met with direct thermal energy when it is available (e.g., domestic hot water or process heat), which is called QP.

Figure III-1 .—The Problem

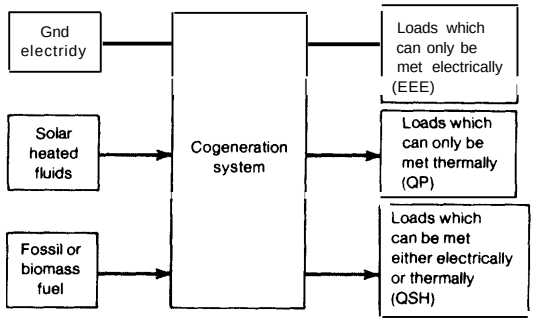

The problem can best be understood by following the flow of energy from the initial source of high-temperature energy (Q_H) to the demands, examining the decisions that must be made at each point. The first choice needed is whether the high-temperature energy should be sent to the engines or be used directly. Figure III-2 shows valve #1 which splits the high-temperature heat sending $ßQ_H$ to the engines and $(1 - ßQ_H$ to the thermal loads where ß represents the valve setting. The high-temperature heat enters the first engine and is converted into an electrical output of ßQHql, where η_1 is the efficiency of the first engine. Some of the energy not converted to electricity is available as heated fluids. In a completely general case, two waste heat streams may be available: a "low-quality" waste heat stream at a temperature too low for use in a bottoming cycle; and, a "high-quality" stream, which can be used in a second engine. In the calculations that follow, the ratio between

the energy available as "high-quality" heat and the electrical output of the first 'engine is called α_1, and the ratio of the energy available as "low-quality" heat to the electrical output of the first engine is called α_2.

Figure III-2.—Simplified System Diagram

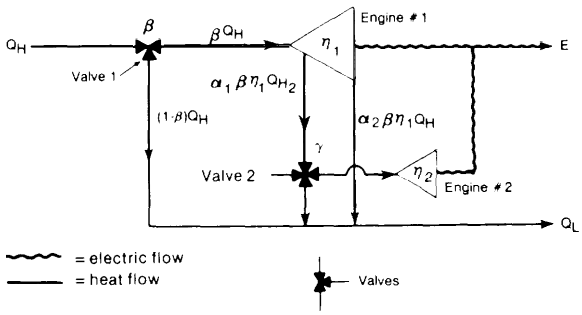

If a second, or bottoming cycle, engine is available, a choice must be made about the optimum use of the high-quality waste heat stream. The second valve can be used to send part of this energy to the second engine and part directly to thermal loads. The setting of this valve is indicated through the variable γ. When γ is 1, all of the high-quality waste heat is sent to the second engine.

With this notation, the net thermal (Q_T) and electrical (E) output of the system can be written as follows:

$$(E/Q_H) = \beta\eta_1(1+\gamma\alpha_1\eta_2) \quad (1)$$

$$(Q_T/Q_H) = (1-\beta) + \beta\eta_1((1-\gamma)\alpha_1 + \alpha_2) \quad (2)$$

Here η_2 is the efficiency of the second engine. The problem becomes one of minimizing Q_H for fixed energy demands E and Q_T. If there is no thermal demand, clearly the optimum valve settings are β = 1 and γ =1. It can be shown that as thermal demands increase, the best strategy will use the following procedure: 1) leave β = 1 and γ = 1 until the waste heat generated in this way cannot meet the thermal demands, 2) *reduce the* energy entering the second engine (i. e., γ <1) while leaving β = 1 until the thermal demand cannot be met with β =1, 3) meet additional thermal demands by leaving γ = O and reducing β. (See appendix I I I-A.)

The method for determining Q_H, β, and γ for a given E and Q_L~ is as follows:

If $Q_L \leq \alpha_2 E/(1+\alpha_1\eta_2)$, then

$$\beta = 1$$
$$\gamma = 1 \quad (3)$$
$$Q_H = E/(\eta_1(1+\alpha_1\eta_2))$$

If $\alpha_2 E/(1+\alpha_1\eta_2) \leq Q_L < (\alpha_1+\alpha_2)E$, then

$$\beta = 1 \quad (4)$$
$$\gamma = [E(\alpha_1+\alpha_2) - Q_L]/[\alpha_1(Q_L\eta_2 + E)]$$

If $(\alpha_1+\alpha_2)E < Q_L$, then

$$\beta = E/[E(1-\eta_1(\alpha_1+\alpha_2)) + \eta_1 Q_L]$$
$$\gamma = 0 \quad (5)$$
$$Q_H = E/\beta\eta_1$$

Another layer of complexity now has to be added to describe optimum use of E and Q_L to meet the demands EEE, QSH, and QP. The QSH load can be met electrically or thermally. The performance of the electric units is described by the electric coefficient of performance COPE. Similarly, the coefficient of performance for the thermal unit is called CO PA.

If COPA > η_1 (COPE + ($c\gamma_1$+ α_2) COPA), it is more efficient to use high-temperature thermal energy directly than to run it through the heat engine and use the waste heat and electricity. If this condition is not true, it is more efficient to meet some of the space-conditioning load (QSH) electrically, If two engines are available, the best use of the high-quality waste heat must be determined (e. g., is it more efficient to run it through the second heat engine or to use it directly?). If η_2COPE > COPA, it is more efficient to run the high-quality waste heat through engine #2 and then use the electricity generated to meet the space-conditioning load instead of using the high-quality waste heat directly (through COPA) to meet the space-conditioning load.

The availability of storage equipment adds another dimension of complexity. Three types of storage are possible in cogeneration systems: 1) high-temperature storage; 2) low-temperature storage; and 3) electric storage. It is assumed that storage is never charged with backup power except in the cases where backup fossil heat is used to meet electric needs and excess waste heat produced in the process is available to

charge the low-temperature storage.

Low-temperature storage should not be charged directly from collector output; it is only charged when there is excess waste heat or when there is overflow from high-temperature storage. The use of high-temperature energy is minimized if all available energy in low-temperature storage is used before any high-temperature energy is used. High-temperature energy is kept in reserve since storing energy in this high-quality form maximizes the flexibility of using the available energy. A special problem arises when both batteries and high-temperature storage are available. It is assumed that batteries will be more expensive than high-temperature storage and therefore batteries should be kept charged whenever possible to maximize their use. This in turn assumes that the batteries were sized in an optimum way. When the high-temperature storage is filled, the overflow is sent to be stored in low-temperature storage. When low-temperature storage is filled, the overflow is discarded in a cooling tower or in some other way. If it is possible to sell excess electricity to an electric utility grid, however, this analysis assumes that an attempt is made to use the amount of high-temperature energy that exceeds the capacity of high-temperature storage to generate electricity for sale. The amount of electricity that can be sold is limited by the maximum generating capacity specified for the engines. In no case is electricity sold when high-temperature storage (when available) is not filled to capacity.

It should be noticed that in the analysis displayed here, it has been necessary to specify the hierarchy with which the storage units are charged and discharged. The priorities for using energy are: 1) meet onsite energy demands; 2) charge batteries; 3) charge high-temperature storage; 4) sell electricity to the grid; and, 5) charge low-temperature storage. In some cases meeting the electrical requirements results in a situation where low-temperature storage is charged because excess waste heat is available. The priorities for discharging storage are: 1) discharge low-temperature storage; 2) discharge high-temperature storage; and, 3) discharge battery storage. Given this set of priorities, it is possible to optimize the use of available energy. While a reasonable case can be made for the priorities specified, it is entirely possible that system performance could be improved with a more sophisticated strategy. Solving this problem, and thereby allowing an optimum choice of storage types and capacities, would require that economic factors be considered along with the analysis of energy use. Such an optimization has not been attempted in this study.

It can be seen that optimizing a generalized cogeneration system can be complex. The following sections present a detailed description of the logic used in a computer program designed to simulate the performance of optimized systems (a listing of this program is in appendix III-B). The logic depends on the type of backup energy available.

COGENERATION SYSTEM WITH ELECTRIC BACKUP

Figure III-3 shows the most general form for a cogeneration system which relies entirely on an electric utility for backup. As the loads must be met either from the output of the solar collectors, storage devices, or by backup electricity purchased from the grid, COPE and EHWEFF (the efficiency of the electric hot water heater) must always be non-zero. In a system with electric backup, energy from the collectors or storage is used to meet onsite energy demands with the following priorities: QP loads, QSH loads, EEE loads.

In the calculations, the system is optimized for each hour of the year. At the beginning of each hour the problem is as follows: Loads EEE, QSH, and QP must be met; the amount of energy in storage is known, and, the amount of high-temperature energy from direct solar energy is known. The problem is one of efficiently using the stored energy and the direct solar energy, and mini-

Figure III-3.—Cogeneration System With Grid Backup

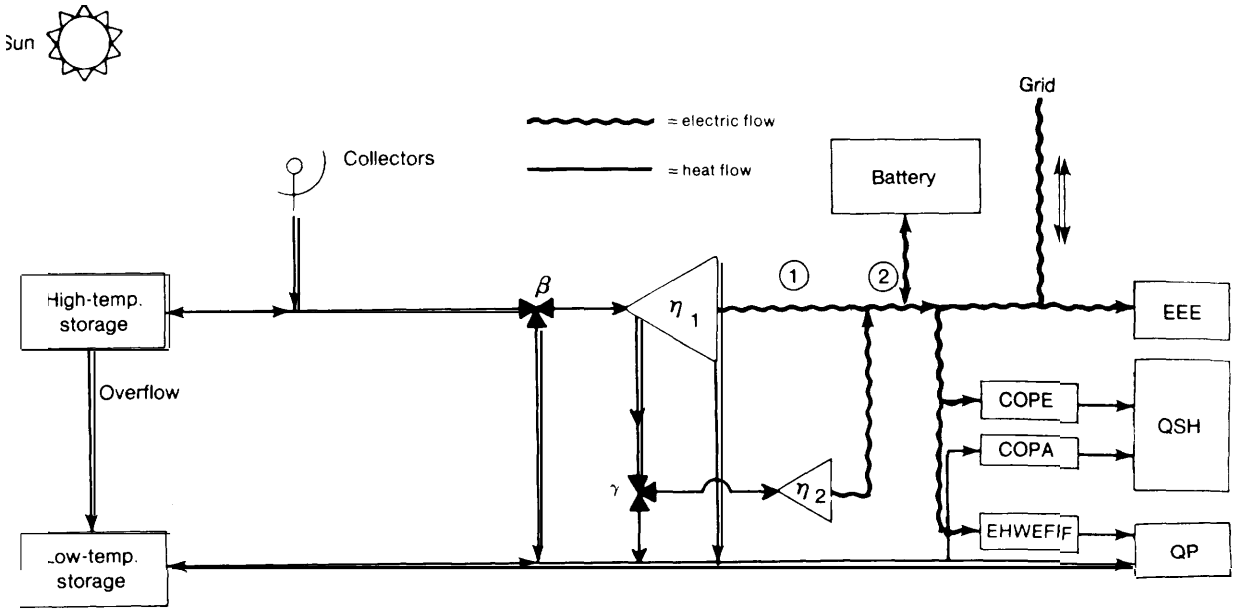

mizing the energy that must be purchased.

The first step is to meet as much of the process load QP (and the space-conditioning load if COPA is non-zero) as possible with the energy available in low-temperature storage. If only part of these loads can be met from low-temperature storage, the process load QP is met first and any remaining energy is used for the QSH load.

The second step is to determine whether enough high-temperature energy is available to meet any QP load remaining after step one. Available high-temperature energy is the sum of the energy in high-temperature storage and the energy available directly from the collector. If the QP loads cannot be met by high-temperature energy (the remaining QP is called QP'), high-temperature storage is set to zero, and electricity is purchased from the grid in order to meet the remaining loads. The backup electricity which must be purchased in this case (EBU) is given by:

$$EBU = EEE + QSH + QP'/E\ HWEFF \qquad (6)$$

where EHWEFF is the efficiency of the electric heater used to provide energy for the remaining QP loads [e. g., an electric hot water heater). If the amount of high-temperature energy exceeds QP one of three paths must be taken depending on the relative values of COPA, COPE, η_1, η_2, α_1, and α_2.

A Case Where Thermal Energy Cannot Be Used To Meet the Space. Conditioning Load

If the available high-temperature energy exceeds the process load, it may be possible to meet some of the electrical demands using the available high-temperature energy. A check must first be made to determine whether it is possible to meet the QSH loads with thermal energy (i.e., whether COPA is non-zero). It is assumed that for heating purposes, COPA is always 1.0; therefore COPA can only be zero for a cooling load. If the QSH load cannot be met thermally; a check is then made to determine whether the optimum approach is to use all available high-temperature thermal energy to generate electricity and set β and γ to minimize the output of thermal energy (subject to the constraint that the remaining QP load is met). The available high-temperature thermal energy consists of all energy in high-

temperature storage and the energy available directly from the collectors.

A check must then be made to determine whether this results in the output of the first engine exceeding the maximum generating capacity specified. If the maximum is exceeded, it is necessary to recompute β, γ, and the amount of high-temperature energy used with the constraint that the electricity reaching point 1 in figure II I-3 is equal to the maximum capacity of the first engine.

The next check that must be made is to determine whether the electricity generated now exceeds onsite demands for electricity. These onsite demands consist of: 1) the remaining QP loads; 2) QSH loads; 3) EEE loads; and, 4) charging the batteries at the maximum rate allowed by the power conditioner capacity specified. If the electricity that could be generated during the hour in question exceeds these onsite demands, it might be possible to sell electricity to the utility. A check must first be made, however, to determine whether selling electricity would result in a situation where the high-temperature storage unit was not filled to capacity at the end of the hour. If high-temperature storage would not be full, the amount of energy entering the engines and the valve settings are adjusted to reduce the amount of electricity and leave the high-temperature storage completely filled.

With this check the sequence is completed and the problem can be solved again for the next hour.

A Case Where Thermal Energy Is Used To Meet the Space= Conditioning Load

The previous discussion was limited to cases where QSH could not be met with thermal energy. If the following inequality holds:

$$COPA > \eta_1 (COPE + COPA (\alpha_1 + a,)) \quad (7)$$

it is more efficient to meet the QSH loads with direct thermal energy than it is to meet these loads with a cogeneration approach where both thermal (CO PA) and electrical (COPE) equipment are used to meet thermal demands. This case can be treated using a method that is completely analogous to the case explained previously. AI I that is necessary is to define an "effective process load" QP' and an "effective QSH load" QSH' as follows:

$$QP' = QP + QSH/COPA \quad (8)$$
$$QSH' = O$$

All other steps follow as described above.

A Case Where Using Thermal Energy To Meet the Space-Conditioning Load Is More Efficient Than Using Electricity Generated by the Second Heat Engine

If the following conditions hold:

$$\eta_1 (COPE + 'COPA (\alpha_1 + \alpha_2)) < COPA \quad (9)$$
$$COPA \geq \eta_2 COPE$$

it is more efficient to meet QSH loads with direct thermal energy from the high-quality waste heat stream than it is to generate electricity with the second engine and use the electrical conversion unit characterized by COPE. Generating electricity with the first engine and using this electricity in the electrical conversion unit and all available waste heat to meet QSH demands thermally is more efficient than using the available high-temperature energy directly to meet the QSH demands.

The first step is to use all energy available in low-temperature storage to meet the QP and QSH demands. The second step is to determine whether the high-temperature energy available (i.e., the solar energy received directly during the hour plus any energy available from high-temperature storage; this sum is called SOLE in the remainder of this discussion) is sufficient to meet the remaining QP load. If the remaining QP cannot be met in this way, QP is reduced by the available energy and backup electricity must be purchased. The amount purchased can be computed using equation (6).

If the available high-temperature energy is greater than the remaining QP, a somewhat complex procedure must be used to determine the optimum valve settings. The

steps follow the sequence as outlined in equations (3) through (5), where an attempt is made to use all available high-temperature energy.

It is first determined whether sending all of SOLE through the first engine and all high-quality waste heat through the second engine (i. e., γ = 1 and ß = 1) produces enough waste heat to meet the thermal loads. If the condition:

$$(SOLE)\ \eta_1\alpha_2 \geq QP + QSH/COPA \qquad (10)$$

holds, all QP and QSH loads can be met with low-quality waste heat. γ = 1 and ß = 1 are the best valve settings, and the calculations can proceed to test whether engine maxima are exceeded.

If the inequality in (10) does not hold, it is necessary to send some of the high-quality waste heat directly to the thermal loads or, equivalently, the value of γ must be less than 1. (The theorem proved in appendix I I I-A shows that it is better to adjust γ than to adjust ß). If the condition:

$$SOLE\ \eta_1(c\gamma_1 + \alpha_2) \geq QP + QSH/COPA \qquad (11)$$

holds, then the QP and QSH demands can be met entirely with thermal energy without the need to divert any high-temperature energy from the input of the first engine, although some high-quality waste heat must be diverted from the second engine. The valve settings are then given by:

$$ß = 1 \qquad (12)$$

$$\gamma = \frac{SOLE\ \eta_1(\alpha_1 + \alpha_2) - QP - QSH/COPA}{SOLE\ \eta_1\alpha_1}$$

If the condition shown in equation (11) is not met, it is necessary to meet some of the QSH loads with electricity. The condition specified in equation (9) implies that it is more efficient to use high-temperature energy in the first engine and run the electricity through an electrical converter with COPE than to use it directly through the thermal conversion equipment characterized by COPA. The next step, therefore, is to determine whether it is possible to meet the QP load with valves set so that ß = 1 and γ = O. This is possible if the following inequality holds:

$$SOLE\ \eta_1(\alpha_1 + \alpha_2) \geq QP \qquad (13)$$

Some QSH loads may be met thermally with the remainder met electrically from the output of the first engine or (if necessary) from backup electricity.

The amount of QSH that can be met thermally (QCT) is given as follows:

$$QCT = [SOLE\ \eta_1(\alpha_1 + \alpha_2) - QP]\ COPA \qquad (14)$$

If the inequality in equation (13) does not hold, it is not possible to meet the QP loads without diverting some high-temperature energy from the input of the first engine. In this case all of the QSH loads must be met electrically from the output of the first heat engine (or, if necessary, from backup electricity) and the optimum valve settings are as follows:

$$\gamma = 0 \qquad (15)$$

$$ß = \frac{SOLE - QP}{SOLE\,(1 - \eta_1(\alpha_1 + \alpha_1))}$$

(The quantity ß will never be zero since it was necessary to determine that SOLE was greater than QP in order to reach the sequence of tests just described.)

Having determined the optimum valve settings it is again necessary to determine whether the use of SOLE with the optimum valve settings results in a situation where the first engine is required to produce electricity at a rate which exceeds the specified maximum capacity (ENGMAX). If the following inequality holds,

$$ß\eta_1\ SOLE > ENGMAX \qquad (16)$$

the engine maximum is exceeded and it is necessary to readjust the valves.

The new valve settings are computed

following a sequence of tests similar to those indicated in equations (10) through (16):

A)

If $QP + QSH/COPA \leq \alpha_2$ ENGMAX, then

$$\beta = 1 \qquad (17)$$
$$\gamma = 1$$

B)

If $QP + QSH/COPA \leq (\alpha_1 + \alpha_2)$ ENGMAX

$$\beta = 1 \qquad (18)$$
$$\gamma = \frac{\text{E NC MAX}(\alpha_1 + a,\} \text{ QP-QSH/COPA}}{a, \text{ ENGMAX}}$$

C)

If $QP + QSH/COPA > (\alpha_1 + \alpha_2)$ ENGMAX

$$QP \leq (\alpha_1 + \alpha_2) \text{ ENGMAX} \qquad (19)$$
$$QSH \leq (\text{ENGMAX - EEE})COPE + (\text{ENGMAX}(\alpha_1 + \alpha_2) - QP)COPA$$

Then $\beta = 1$

$$\gamma = 0$$

The third test involving the miscellaneous electrical load (E E E) is necessary to ensure that there is enough electrical output to meet the QSH loads, which are not met thermally.

D)

If $QP + QSH/COPA > \alpha_2$ ENGMAX **(20)**

$$QP \leq (\alpha_1 + \alpha_2) \text{ ENGMAX}$$
$$QSH > (\text{ENGMAX - EEE})COPE + \text{ENGMAX } (\alpha_1 + \alpha_2) - QP(COPA)$$

Then

$$\beta = [COPA(ENGMAX)] / [\eta_1 QSH + \eta_1 COPE[EEE\text{-}ENG_{MAX}] + COPA\,[QP\eta_1 + ENGMAX(1 - (a, + \alpha_2)\,\eta_1)]$$

$$\gamma = 0$$

E)

If $QP > (\alpha_1 + \alpha_2)$ ENGMAX, then (21)

$$\beta = \frac{\text{ENGMAX}}{\text{ENGMAX}(1-\eta_1(\alpha_1 + \alpha_1)) + \eta_1 QP}$$

$$\gamma = 0$$

In each case a check must be made to determine the amount of electricity available for charging the battery.

With this, the correct valve settings have been determined. As before, however, a check must be made to determine whether using the specified settings will leave the high-temperature storage filled. If the high-temperature storage is not filled at the end of the hour, and if the use of the optimum valve settings results in a situation where electricity would be sold to the utility, the system should be adjusted to use less high-temperature energy. (A similar recalculation is required if excess electricity cannot be sold to an electric utility grid.) The first step in such a recalculation is to determine the valve settings that would be used if the system met only the minimum electrical demands. This will be called EOUT where

EOUT = EEE + (the maximum amount of electricity which can be placed in the batteries) (22)

The maximum amount of electricity that can be put in the batteries is the smaller of the following two quantities: 1) the specified capacity of the power conditioner; and, 2) the difference between the maximum specified battery capacity and the amount of electrical energy stored in the battery at the beginning of the hour.

The valve settings, which optimize production in the case where the system only produces electricity for EOUT, can be computed in the following sequence of steps:

A)

If $QP + QSH/COPA \leq \alpha_2$ EOUT/$(1 + \alpha_1\eta_2)$

Then $\beta = 1$ (23)

$$\gamma = 1$$

B)

If $QP + QSH/COPA > EOUT\ (\alpha_1 + \alpha_2)$ (24)

Then

$$\beta = 1$$
$$\gamma = \frac{(\alpha_1 + \alpha_2)\text{ EOUT} - QP - QSH/COPA}{\alpha_1[\text{EOUT} + \eta_2\ (QP + QSH/COPA)]}$$

C)

If $QP + QSH/COPA\ EOUT(\alpha_1 + \alpha_2)$ (25)

$$QP \leq EOUT(\alpha_1 + \alpha_2)$$
$$QSH \leq (\text{EOUT - EEE})\ COPE + (\text{E OUT } (\alpha_1 + \alpha_2) - QP)COPA$$

Then $\beta = 1$

$$\gamma = 0$$

D)

If $QP + QSH/COPA > EOUT(\alpha_1 + \alpha_2)$ (26

$$QP \leq EOUT(\alpha_1 + \alpha_2)$$
$$QSH > (\text{EOUT} - \text{EEE})\ COPE + (\text{EOUT } (\alpha_1 + \alpha_2) - QP)\ COPA$$

Then β and γ are given by equation *(20) using* EOUT instead of ENGMAX,

E)

If $QP\ (\alpha_1 + \alpha_2)$ EOUT (27)

Then

$$\beta = \frac{\text{EOUT}}{\text{EOUT } (1 - \eta_1(\alpha_1 + \alpha_2)) + \eta_1 QP}$$

$$\gamma = 0$$

With the valve settings calculated in equations (23) through (27), it is possible to calculate the minimum amount of high-temperature energy that must enter the system to meet the loads. If the difference between the amount of solar energy produced during the hour and this minimum amount can be placed in high-temperature storage, the computation is complete for the hour. If high-temperature storage would be exceeded, another step must be taken. The amount of high-temperature energy available after the high-temperature storage is filled can be calculated and the optimum technique for using this energy computed by using equations (10) through (21) (assuming that electricity can be sold). If no electricity can be sold, the excess high-temperature energy is transferred to the low-temperature storage. The low-temperature storage is filled to capacity and the remaining energy discarded.

A Case Where Using Electricity To Meet the Space-Conditioning Load Is Always More Efficient Than Using Thermal Energy

If the inequality:

$$COPA < \eta_2 COPE \qquad (28)$$

holds, it will be more efficient to meet the QSH loads using electricity from the second engine than it will be to use thermal energy to meet QSH loads directly. The thermal units characterized by COPA will, therefore, only be used if α_2 is sufficiently large to justify the installation of thermal conversion equipment. The basic procedure followed in this case is identical to the one described previously with small differences resulting from the relative values of COPA and $\eta_2 COPE$. The steps which are equivalent to equations (1 O) through (15) are as follows:

A)

If SOLE $\eta_1 \alpha_2 \geq QP$ (29)

Then ,13 = 1

$$\gamma = 1$$

(It should be noted that if COPA is not zero and SO $LE\eta_1\alpha_2$ > QP, any "excess" low-quality waste heat is used to meet the space-conditioning load.)

B)

If SOLE $\eta_1(\alpha_1 + \alpha_2) \geq QP >$ SOLE $\eta_1\alpha_2$ (30)

Then ß = 1

$$\gamma = \frac{SOLE\ \eta_1(\alpha_1 + \alpha_2) - QP}{SOLE\ \eta_1\alpha_1}$$

c)

If QP SOLE $\eta_1(\alpha_1 + \alpha_2)$ (31)

Then ß = $\dfrac{SOLE\eta_1(\alpha_1 + \alpha_2) - QP}{SOLE\ [\eta_1(\alpha_1 + \alpha_2) - 1]}$

$$\gamma \equiv 0$$

The remainder of the calculation can be readily derived following this pattern.

At the end of each hour, the net amount of electricity and low-temperature thermal energy produced from the high-temperature inputs and valve settings can be determined. These are used to meet the EEE, QSH, and QP loads. Any remaining low-temperature energy is placed in low-temperature storage. Any remaining electricity is placed in the batteries or sold to the utility if the batteries are filled. Onsite demands that cannot be met with the onsite power are met by purchasing electricity.

COGENERATION WITH FOSSIL FUEL OR BIOMASS BACKUP

Figure II I-4 illustrates a completely general cogeneration system, which is not tied to a utility grid but is backed up with a fossil or biomass fuel source. Notice (although not shown in figure 3) that in the general case there are three different kinds of boilers: 1) a boiler used in the system providing backup to the heat engine (this could be a coal-fired steam boiler to back up a solar-powered steam engine, the burner efficiency in the backup unit used in a Stirling engine, etc); 2) a boiler efficiency for the QSH loads (this could be the burner efficiency in an adsorption chiller), and 3) the boiler used to produce QP.

The logic of the fossil backup case is very similar to the logic employed in the electrically backed up system and details are not shown here. The program which per-

Figure III-4.—Cogeneration System With Fossil Fuel Backup

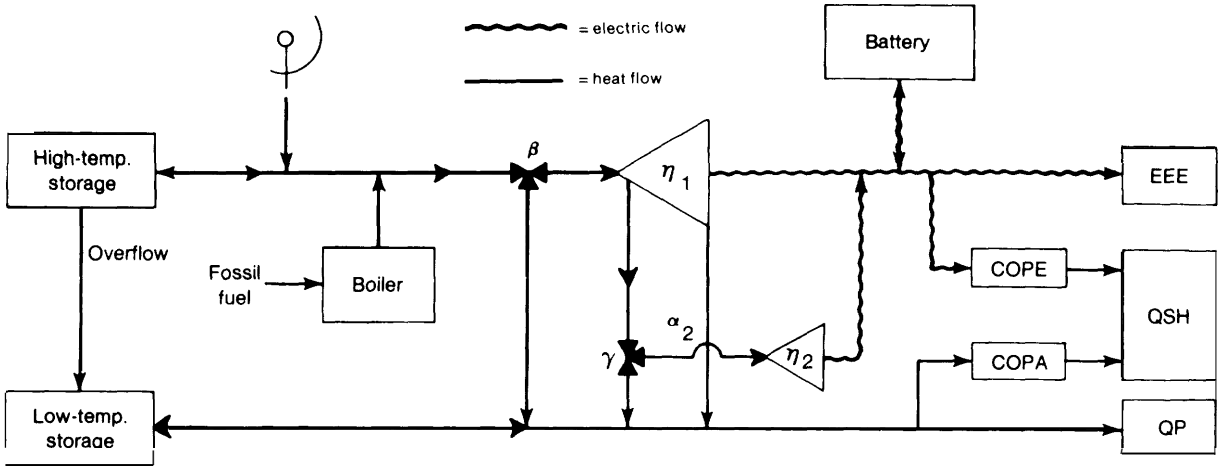

forms the necessary calculations is reproduced in appendix III-B. The major differences between the fossil and the electrical case are:

- Either COPA or COPE (but not both) can be zero in the case of fossil backup.
- It is assumed that the loads will be met at all times. If an engine size is specified which does not permit meeting the loads, the calculation performed in this analysis will correct the initial estimate as necessary.
- In some cases high-temperature energy from several different sources must be used to meet the onsite loads. It is assumed that the highest temperatures available to the system are obtained from burning fossil fuels or biomass, fluids emerge from collectors at a lower temperature, and fluids emerging from high-temperature storage are at a still lower temperature. (In most cases examined, it is assumed, however, that all three provide identical temperatures but an option for using different temperature is kept open. The efficiency of the first engine must be adjusted to reflect the different fluid temperatures.) The highest temperature fluids are used in the engine whenever possible.

A COMPUTER ANALYSIS OF COGENERATION

A Fortran computer program was prepared for this analysis which performs the optimization procedure just described. A sample of the data, which the program requires to perform an evaluation of a cogeneration system, is illustrated in table 111-1 and a sample of the formatted output of the program is illustrated in table II 1-2. A listing of the package of programs is shown in appendix 1 I I-B. An operating manual explaining the use and operation of these programs in greater detail is available as a separate Volume.

CALCULATION OF COLLECTOR PERFORMANCE

The techniques used to compute the thermal output of different kinds of collectors were explained in the appendix to chapter VIII of volume I and the equations used to compute the thermal and electrical output of photovoltaic devices were discussed in chapter X of volume 1. The following section describes how the formulas developed in volume I were used to evaluate the systems analyzed.

Collector output is computed in three

Table III-1 .—Sample Input

```
TOT IO . JB

TITLE : PHOTOVOLTAIC COGENERATION--HIGH RISE, ALB (TEST SYSTEM)
SAVE HOURLY ELECTRICAL OUTPUT: NO
PRINT MONTHLY TOTALS OF SOLAR/DEMAND VARIABLES: YES
PRINT AVERAGE AND END OF MONTH VALUES OF STORAGE: YES
PRINT INPUT SUMMARY: YES
USE SEASONAL PARAMETERS: NO
FILE NUMBER FOR SYSTEM COEFFICIENTS: 90
LIST/CHANGE VARIABLES AND VALUES: NON
MAXIMUM PUMP/FAN LOAD--HEATING, COOLING (KW FAN/TOTAL OUTPUT): 59.24 59.24
HEAT LOSS FOR LT TANK OF LOW TEMP STORAGE (KWH/DEG CENT/HR): 0.001
AMBIENT TEMP. FOR LT STORAGE (DEG CENT): 25
FILE NUMBER FOR COLLECTOR COEFFICIENTS: 91
LIST/CHANGE VARIABLES AND VALUES: NON
FILES FOR ELECTRIC H/C COP'S: 43 44
INITIAL. VALUES OF LOW TEMP> HIGH TEMP, AND ELEC STORAGE (KWH): 5131/
```

subroutines:

COLL1, which is used for flat-plate collectors and two-axis tracking collectors (except heliostats]

COLL2, which is used for one-axis tracking collectors; and

COLL3, which is used for heliostats.

The three programs are very similar in basic structure. As a result, only the **COLL1 program is discussed in detail the discussion of the other two subroutines concentrates** primarily on features that differ from COLL1.

Each subroutine can be entered **in four different ways. These entry points are illustrated in figure III-5. The collector subroutine is called initially to read information from external** files and to convert this data into a form that can be **used in the computation. The subroutines obtain information in two steps. First two files are read; one containing the solar declination for each day of the year and one containing information about the performance of the collector. A sample file of collector performance characteristics required to operate the program was shown** in table III-2. After **these files are read, the performance characteristics can be changed as necessary. The revised set of performance characteristics can be saved in a new file for later use if this is desired.**

The program is then entered for each hour of the year to compute the electrical and thermal output of collectors **given information about ambient air temperature, the temperature of fluids entering the collector, and (if a fixed output temperature is specified)** the output temperature of the collector.

At the end of the yearly computation the program is entered two more times to print a description of the collector and to summarize the assumptions made about collector performance.

The COLL1 Collector Subroutine

The COLL1 subroutine computes the output of either flat-plate collectors or two-axis tracking collectors. It can be **used to compute the output of collectors that provide only thermal energy, of photovoltaic collectors that provide only electrical output, or of photovoltaic cogeneration systems that provide both thermal and electric output. A** listing of the program is given in appendix III-B.

Figure III-6 shows a flow diagram for the section of the program which reads and converts the initial data (entry point 1 on figure I I 1-5).

The first input read is a table of declina-

Table III-2.—Sample Output

```
PHOTOVOLTAIC COGENERATION--HIGH RISE, ALB (TFST SYSTEM)          DATE :   8/17/78
                                                                 TIME:  lb:  9:14

PHOTOVOLTAIC  SYSTEM
ELECTRIC   BACKUP
TWO-AXIS   TRACKING   SYSTEM
COMBINED   THERMAL   AND   ELECTRIC   COLLECTOR
CONSTANT   OUTPUT   TEMPERATURE
LOADS  SET  UP  FOR  HIGH  RISE  APARTMENT  BUILDING
THE  MISCELLANEOUS  ELECTRIC  LOADS  AND  THE  HOT  WATER  LOADS
      ARE  NOT  SMOOTHED


SYSTEM   COEFFICIENTS:
        REAL  NUMBERS
 #      VALUE     DEFINITION
 1  o.          :ABSORPTION  A/C  COP  (DIM)
 2  8.000E-01   :ELECTRIC  HOT  WATER  HEATER  EFFICIENCY   .LE.  ,00)
 3  1.000E+OO   :MULTIPLIER  FOR  ELECTRIC  HEATING  COP'S  (DIM
 4  1.000E+OO   :MULTIPLIER  FOR  ELECTRIC COOLING  COP'S  (DIM
 5  o.          :BOILER  EFFICIENCY  (.LE.  1.00)
 6  0.          :MAXIMUM  TOPPING  ENGINE  OUTPUT  (KU)
 7  0.          :EFFICIENCY  OF  ENGINE #1  (.LE.  1.00)
 8  0.          :EFFICIENCY  OF  ENGINE  #2  (.LE.  1.00)
 9  0.          :ALPHA  l--HIGH  TEMP  WASTE  HEAT COEFF.   DIM)
10  0.          :ALPHA  2--LOW  TEMP  WASTE  HEAT  COEFF.  (1 (DIM)
11  o.          :CAPACITY  OF  HIGH  TEMPERATURE  STORAGE  (KWH)
12  5.380E+02   :LOW  TEMP.  OF  HIGH  TEMP.  STORAGE  (DEG  CENT)
13  7.600E+02   :HIGH  TEMP.  OF  HIGH  TEMP.  STORAGE   (DEG CENT)
14  1.000E+04   :CAPACITY  OF  LOW  TEMPERATURE  STORAGE  (KWH)
15  2.700E+01   :LOW  TEMP.  OF  LOW  TEMP.  STORAGE  (DEG  CENT)
16  6.600E+0l   :HIGH  TEMP.  OF  LOW  TEMP.  STORAGE  (DEG CENT)
17  o.          :HEAT  LOSS--HIGH  TEMP.  STORAGE  (kWH/DEG CENT/HR)
18  0.          :EFFICIENCY  OF  FOSSIL  HOT  WATER  HEATER  (.LE.  1.00)
19  1.000E-03   :HEAT LOSS--LOW   TEMP.  STORAGE (KWH/DEG., CENT/HR)
20  o.          :ENGINE  BOILER  EFFICIENCY  (.LE.  1.00)
21  1.200E+03   :CAPACITY   OF   ELECTRIC  STORAGE  (KWH)
22  7.500E-01   :EFFICIENCY  OF  ELECTRIC  STORAGE  (.LE.  1.00)
23  1.000E+06   :CAPACITY  OF  ELECTRIC  POWER  CONDITIONER  (KU)
24  9.500E-01   :EFFICIENCY  OF  POWER  CONDITIONING (.LE.  1.00)
25  8.305E+02   :MAXIMUM  HEATING  LOAD  (KU)
26  5.037E+02   :MAXIMUM  COOLING  LOAD  (KU)
27  0.          :FAN  COEFFICIENT  (KW  FAN/KW  OUTPUT)
28  7.000E+O1   :LOW  TEMP.  FOR  OPEN  WINDOWS--A/C  CUTOFF  (DEG  F)
29  7.700E+01   :HIGH  TEMP.  FOR  OPEN  WINDOWS--HT  CUTOFF  (DEG  F)
        INTEGERS
 #     VALUE     DEFINITION
 1       1      :HIGH  TEMPERATURE  STORAGE  (MIX(2),  NO MIX(l))
 2       1      :LOW  TEMPERATURE  STORAGE  (MIX(2),  NO  MIX(l))
 3       1      :BACKUP  (FOSSIL  FUEL(0),  ELECTRIC(I),  BOTH(3))
 4       3      :SOLAR  COLLECTOR  (NONE(0),FP(1),1D(2),2D(3),HEL(4)
 5       1      :AIR  CONDITIONING  ON(1)  OR  OFF(2)
 6       o      :REGULAR  LOADS(0)  OR  SMOOTHED LOADS(1)
 7       1      :SINGLE  FAMILY(O),  HIGH  RISE(l),  SHOPPING  CENTER(2
 8       o      :BUY  OFFPEAK  ELECTRICITY  (NO(0),  YES(l))

COLLECTOR_  COEFFICIENTS:
        REAL  NUMBERS
 #      VALUE     DEFINITION
 1  5.000E+02   :CONCENTRATION  RATIO  (DIM)
 2  7.6OOE-01   :OPTICAL  EFFICIENCY  OR  TRANSMISS.  (.LE.  1.00)
 3  2.500E+03   :COLLECTOR  AREA  (M**2)
 4  3.508E+01   :LATITUDE  (DEG)
 5  1.066E+02   :LONGITUDE  (DEG)
 6  1.050E+02   :STANDARD  LONGITUDE  (DEG)
 7  3.508E+01   :COLLECTOR  TILT  ABOVE  HORIZONTAL  (DEG)
 8  0.          :COLLECTOR  ANGLE  WRT  SOUTH  (DEG)
 9  5.000E+00   :COLLECTOR  HEAT  REMOVAL  FACTOR  (KW/(M**2*C))
10  2.1OOE-O3   :CELL  TEMP COEFF  (1/DEG  CENT)
11  2.200E-01   :CELL  EFFIC @ 28C (.LE. 1.00)
12  9.500E-01   :CELL  ABSORPTIVITY  (.LE.  1.00)
13  1.000E.+00  :FRAC  OF  RECEIVER  COVERED  WITH  CELLS  (.LE.  1.00)
14  1.500E-O.2  :THERMAL  LOSS  COEFF  (KW/M**2*C)
15  1.000E+OO   :NUMBER  OF  GLASS  COVERS  (DIM)
16  1.000E+OO   :COLLECTOR  HEAT  REMOVAL  FACTOR  (.LE.  1.00)
17  9.800E-01   :ABSORB  OF  THERMAL-ONLY  SURFACES  (.LE.  1.00)
18  l.000E+0l   :FLOW  RATE  (CM**3/SEC*M**2)
19  1.000E.+00  :FLUID  DENSITY  (GM/CM**3)
20  1.000E+00   :FLUID  SPEC.  HEAT  (CAL/GM*C)
        INTEGERS
 #      VALUE     DEFINITION
 1       2      :OUTPUT--ELEC( 1) ,  ELEC  &  THERMAL(2),  THERMAL(3)
 2       2      :CONST  FLOW  RATE(1) ,  CONST  OUTPUT  TEMP(2)


            STORAGE  HEAT  LOSS  COEFFICIENTS

                        HEAT  LOSS              AMB.  TEMP
                    (KWH/DEG  CENT/HR)         (DEG.  CENT)
UT  STORAGE  O.                 --  0.              25.0
LT  STORAGE    1.000E-03  --  1.000E-03            25.0

NOTE:   FIRST  HEAT  LOSS  NUMBER  IS  FOR  HT  TANK  OF  THE  PARTICULAR
        STORAGE;  SECOND  IS  FOR  LT  TANK  OF  THE  SAME  STORAGE.


      ELECTRIC  H/C  COP'S  (KWH/KWH)
   TEMP     HEAT          TEMP     COOL
   10.0     1.00          75.0     2.50
   20.0     1.00          80.O     2.35
   30.0     1.00          90.0     2.07
   40.0     1.00         100.0     1.86
   50.0     1.00         110.0     1.67
   60.O     1.00         120.0     1.52
   70.0     1.00           --       --
```

Table III-2. —Sample Output (Continued) (Cont.)

PHOTOVOLTAIC COGENERATION--HIGH RISE, ALB (TEST SYSTEM) DATE: 8/17/78
TIME: 16: 9:14

ELECTRICITY AND FOSSIL FUEL BACKUP DEMANDS (KWH)

MONTH	ELEC. BUY	ELEC. SELL	FUEL USE	EXCESS IT ENERGY
1	1.574E+05	0.	0.	1.146E+04
2	5.055E+04	0.	0.	5.591E+04
3	6.922E+04	8.798E+00	0.	6.670E+04
4	2.857E+04	1.302E+02	0.	2.212E+05
5	3.627E+04	1.326E+03	0.	3.429E+05
6	6.383E+04	0.	0.	3.651E+05
7	8.756E+04	0.	0.	2.672E+05
8	1.042E+05	0.	0.	3.561E+05
9	7.361E+04	0.	0.	1.618E+05
10	3.959E+04	4.195E+02	0.	1.711E+05
11	5.916E+04	4.442E+02	0.	9.525E+04
12	8.179E+04	0.	0.	3.546E+04
TOTAL	8.517E+05	2.329E+03	0.	2.105E+06

STORAGE VALUES

	ELECTRIC	LOW TEMP	HIGH TEMP
LOAD FACTOR (DIM):	1.466E-01	7.916E-01	0.
INITIAL VALUE (KWH):	0.	5.131E+03	0.
FINAL VALUE (KWH):	0.	5.131E+03	0.
MINIMUM VALUE (KWH):	0.	-5.570E-01	0.
MAXIMUM VALUE (KWH):	1.200E+03	1.000E+04	0.
TOTAL ENERGY PUT INTO (KWH):	2.340E+05	9.853E+05	0.
TOTAL ENERGY TAKEN OUT OF (KWH):	2.340E+05	9.843E+05	0.
MAXIMUM INPUT INTO PC (KWH/HR):	1.961E+02	1.583E+03	0.
MAXIMUM OUTPUT INTO PC (KWH/HR):	3.648E+02	9.999E+02	0.

MAXIMUM SPACE CONDITIONING LOADS

	ELECTRIC	THERMAL	TOTAL
COOLING(KWH):	5.040E+02	0.	5.040E+02
HEATING(KWH):	8.306E+02	8.306E+02	8.306E+02

TOTAL MONTHLY VALUES (KWH)

MONTH	PHOTOVOLT ELECTRIC	SOLAR THERMAL	INTERNAL DEMANDS ELECTRIC	HEAT/COOL	HOT WATER	AVER TEMP (F.)
1	6.367E+04	2.564E+05	1.090E+05	2.857/0. E+05	7.618E+04	30.5
2	6.294E+04	2.508E+05	9.129E+04	1.35/0. E+05	6.865E+04	41.5
3	7.063E+04	2.778E+05	1.018E+05	1.03/0. E+05	7.081E+04	[illegible]
4	8.283E+04	3.260E+05	9.241E+04	[illegible] 1.63E+04	5.962E+04	58.
5	1.043E+05	4.183E+05	9.9[illegible]E+04	2.3[illegible] 6.11E+04	5.09[illegible]E+04	65.
6	1.027E+05	4.115E+05	1.022E+05	[illegible] 1.21E+05	4.024E+04	72.
7	7.771E+04	3.074E+05	1.[illegible]5E+05	.03 1.19E+05	3.619E+04	74.
8	8.637E+04	3.[illegible]38E+05	1.[illegible]5E+05	.01/1.61E+05	3.619E+04	77.
9	5.517E+04	2.[illegible]E+05	4.[illegible]8E+04	1.27/6.23E+04	4.024E+04	68.
10	6.761E+04	2.[illegible]E+05	9.393E+04	4.59/ .38E+04	5.090E+04	57.
11	6.140E+04	2.[illegible]E+05	9.514E+04	1.10/0. E+05	5.961E+04	46.
12	6.752E+04	2.[illegible]E+05	1.041E+05	1.95/0. E+05	7.081E+04	36.
TOTAL	9.028E+05	3.592E+06	1.198E+06	1.01/ .55E+06	6.603E+05	

MAXIMUM SOLAR THERMAL OUTPUT (KWH): 1.598E+03
MAXIMUM SOLAR ELECTRIC OUTPUT (KWH): 3.802E+02
MAXIMUM ENGINE BOILER OUTPUT (KWH): 0.
MAXIMUM NONENGINE BOILER OUTPUT (KWH): 0.
MAXIMUM HOT WATER FUEL USE (KWH): 0.
FOSSIL HEAT PUT INTO ENGINE (KWH): 0.
SOLAR HEAT PUT INTO ENGINE (KWH): 0.
STORAGE HEAT PUT INTO ENGINE (KWH): 0.
MAXIMUM ELECTRICITY BOUGHT IN AN HOUR (KWH): 1.559E+03
MAXIMUM ELECTRICITY SOLD IN AN HOUR (KWH): 2.201E+02
MAXIMUM FUEL BOUGHT IN AN HOUR (KWH): 0.
TOTAL ELECTRICITY BOUGHT (KWH): 8.517E+05
TOTAL ELECTRICITY SOLD (KWH): 2.329E+03
TOTAL FUEL BOUGHT (KWH): 0.

Month	LOAD FACTOR OF STORAGE (KWH) ELECTRIC	LOW TEMP	HIGH TEMP	END OF MONTH VALUES OF STORAGE (KWH) ELECTRIC	LOW TEMP	HIGH TEMP
1	1.53.E - 01	3.465E-01	0.	1.351E+02	8.044E+03	0.
2	1.955 E - 01	5.596E-01	0.	3.776E+00	5.291E+03	0.
3	1.957E-01	6.088E-01	0.	3.807E+02	9.018E+03	0.
4	2.266E-01	9.329E-01	0.	4.825E+02	9.246E+03	0.
5	2.463E-01	9.675E-01	0.	3.178E+02	9.788E+03	0.
6	8.299E-02	9.873E-01	0.	0.	9.704E+03	0.
7	3.461E-02	9.824E-01	0.	0.	9.727E+03	0.
8	2.241E-02	9.844E-01	0.	0.	9.705E+03	0.
9	4.305E-02	8.776E-01	0.	0.	9.447E+03	0.
10	1.672E-02	9.040E-01	0.	0.	9.076E+03	0.
11	1.825E-02	7.153E-01	0.	0.	1.976E+03	0.
12	1.900E-01	5.318E-01	0.	0.	5.131E+03	0.

STOP
SRU'S:56.4

Figure III-5.—Entries to Collector Subroutines COLL1, COLL2, and COLL3

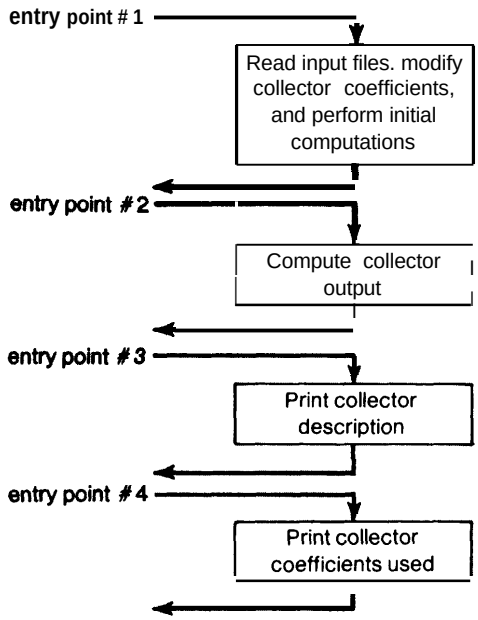

Figure hi-6.-Flow Diagram for Entry Point #1 to COLL1, COLL2, and COLL3

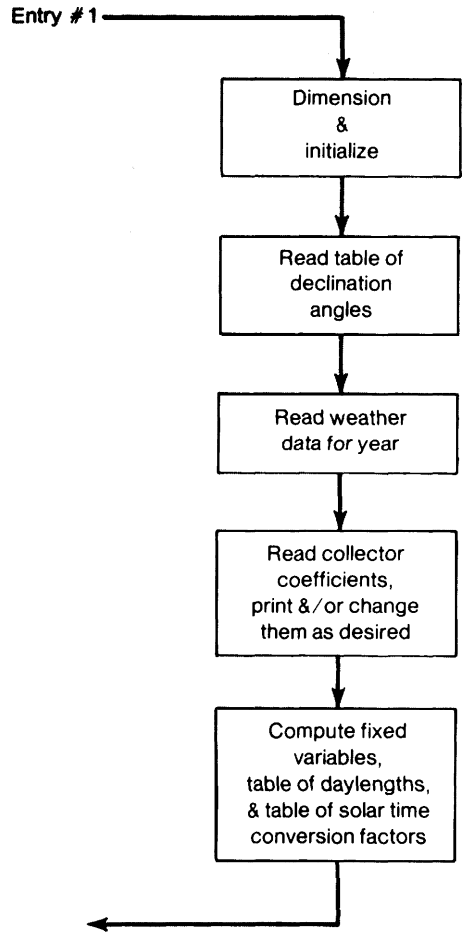

tion angles for each day of the year (line 2014). The direct normal radiation (RADDN) and the hourly total horizontal radiation (RADTH) for the first hour in the year are read from file 25, which contains RADDN and RADTH for each hour of the year in the region being studied. (This file also contains temperature and wind velocity data, which are read into the RADDN array but are then overlaid.) The file containing the collector coefficients is then specified from the terminal or from a stored file. A negative number will set all coefficients to zero. Lines 2020 to 2025 allow the operator to list the collector coefficients read from the file, and to make changes in the assumed collector performance characteristics if this is required.

Changes to the collector coefficients are input using lines 2057 to 2066. The COMMON statement (lines 2005 to 2008) places the variables named in the COMMON statement into the computer's memory space in the order given. The EQUIVALENCE statement [line 201 O) then creates arrays SCEL and ISCEL, which contain the collector coefficient variables in exactly the order given in the COMMON statement. Lines 2057 to 2061 allow the values of any real coefficient to be changed by specifying the coefficient number (as given in the left column of lines 2033 to 2052) and the new value. Input of a negative value will make the program move to the integer variables. The integer variables of lines 2055 to 2056 are changed using lines 2062 to 2066. The modified coefficient files can be stored (lines 2067 to 2070) by specifying a positive file number. Zero or a negative number causes the modified values to be retained until execution of the main program terminates.

The program then calculates several quantities for use in the hourly computa-

tions of collector output. The latitude angle (LAT), collector tile angle (TILT), and the collector azimuth angle (AZ), which were input in degrees, are converted to radians for use in the Fortran program.

The collector absorber area AREACR is calculated by dividing the collector area by the concentration ratio. The quantity XMASSF = (fluid flow volume) x (specific heat) x (density) is computed.

ALPHAV is the effective thermal absorptivity computed from the absorptivity of the photovoltaic cells, (ELECAB), the absorptivity of the portion of the collector not covered with cells, (ALPHA), and the fraction of the collector absorber covered with cells, (FC). The program then calculates the length of each day of the year, (DAYLEN (l)), and the correction factor used to convert local time to solar time, (SONOON (1)). EQ(J) is the equation of time discussed in chapter VIII of volume 1. SONOON (1) converts the hour number to solar time using EQ(J), a constant shifting the time to the middle of the hour and accounting for the fact that hour #1 in each day in the weather arrays (RADDN and RADTH) corresponds to the hour from midnight to 1 a.m. and a term that accounts for locations at longitudes other than standard time zone longitudes.

The hourly computation of collector output begins with line 2101. The pattern of this computation is shown in figure I I 1-7. First RADTH and RADDN are checked to see if the Sun is shining. If both are small, the program sets the collector output(s) to zero, and the computation is complete for the hour. If there is sunlight available the program must compute the hour of the day (J) from the hour of the year (K). It does this by first computing the day number (1). The program next determines whether the hour being examined is less than half an hour after sunrise or before sundown; if this is the case, the program sets the output to zero and returns. (These hours are excluded from the calculation since the algorithm used to compute diffuse radiation can give anomalously high values under these conditions and the amount of energy available during these hours is negligibly small on an annual basis.) RI SANG (line 2110) is the solar hour angle at sunrise.

If it is determined that collector output should be calculated for hour K, the program must first determine what kind of collector is used. It is assumed that the collector is a flat-plate device if a concentration ratio (C RATIO) less than 1.5 is specified; otherwise, the collector is assumed to be a two-axis tracking collector that can collect only the direct radiation. If the collector is a concentrator, the program either branches to 222 to compute thermal output or goes to 224 to compute electric output if the collector provides only photovoltaic electric output (ISYS = 1).

The total useful sunlight striking a square meter of collector absorber (RADTOT) is calculated for concentrators at normal incidence to the Sun. For fiat-plate collectors, the program calculates the cosine of the incident angle (COSINC) on lines 2115 to 2127. If COSTHE is negative, representing an instance where the Sun is behind the Collector, the program Sets the output(s) to zero and exits. The diffuse radiation (RADDIF-lines 2128, 2129) striking the tilted collector is calculated as given in equations VII I-A-I 4 and VII I-A-I 5 of volume 1, and is set to zero if it is calculated to be negative. If the collector is a passively cooled photovoltaic array (ISYS = 1), the program skips to line 2149 to calculate the electric output. Calculation of the total radiation strikin, the collector absorber (RADTOT) depends on whether there are one or two covers (COVERN less than or greater than 1.5). The exponents of COSINC (lines 2132, 21 34) are greater than one to represent the angular dependence of the cover transmission on the incident angle and the factors '0.89 and 0.80 represent this angular dependence integrated over a hemisphere for the diffuse radiation as given by equations VII I-A-I 7 and VI I I-A-I 8 of volume 1.

The total collector output is computed in lines 2135 to 2152. The output of collectors

Figure III-7 .–Flow Diagram for Computing Hourly Collector Output Using COLL1

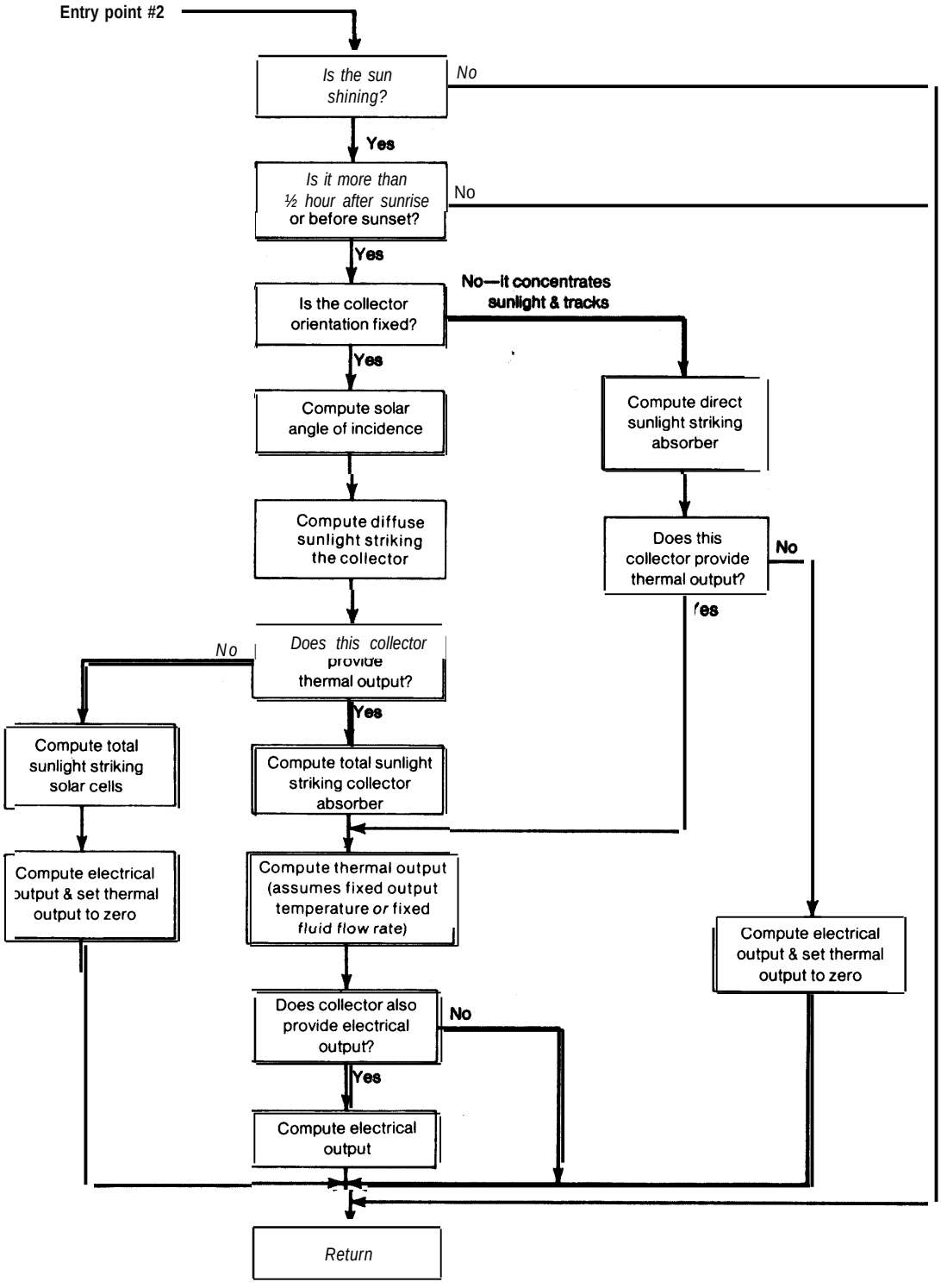

that provide only thermal output is computed with the fractional cell coverage ratio (FC) set to zero **in the expressions used for collectors that also provide electric output.**

The useful thermal output Q_A of a unit area of collector absorber operated at constant output temperature can be computed from the heat balance equation:

$$\alpha I = F_c \eta I + Q_A + U_L (T - T^a) \qquad (32)$$

where α is the average absorptivity for the collector (ALPHAV), I is the level of insolation on the absorber (RADTOT), η is the photovoltaic cell efficiency, F_c is the fraction of the absorber area covered with cells (FC), U_L is the thermal loss coefficient (U LOSS), T is the average temperature of the collector absorber and photovoltaic cells (TCELL), and T_a is the ambient air temperature (TAIR).

The value of I is given by the following relations for flat-plates or concentrating systems:

$$I = I_D \cos\theta_i \tau(\theta_i) + I_d \tau_d \qquad \text{(f tat plates)}$$

$$I = I_D C_r \eta_o \qquad \text{(concentrating systems)}$$

where:

- I_D = **direct** normal solar intensity **(kW/m^2),**
- **6, = angle between the Sun and the normal to the Collector,**
- $\tau(\theta_i)$ = **transmissivity of cell covers for direct radiation (at angle θ_i),**
- I_d = **intensity of diffuse solar radiation (kW/m^2,**
- τ_d = **transmissivity of cell covers for diffuse radiation ($\tau(\theta_i)$ integrated over all incident angles),**
- C_r = **geometric concentration ratio of concentrator optics, and**
- η_0 = **optical efficiency of the concentrator.**

The cell efficiency η is given by:

$$\eta = \eta(28\ 0)(1 - \beta[\overline{T} - 28]) \qquad (33)$$

where η (280, is the cell efficiency at 28"C (CELLEF) and ß is the cell temperature coefficient (BETA).

The average absorber temperature (TCELL) is:

$$\overline{T} = T_f + Q_A / k_e \qquad (34)$$

where T_f is the average collector fluid temperature (TTEMP) and k_e is the thermal conductivity (XKE) between the absorber surface and the fluid.

Combining equations (32) through (34) and multiplyin$_g$ by the total absorber area, the thermal output QSR (line 2142) is given by:

$$QSR = A_A F_R \frac{I[\alpha - F_c \eta(28)(1-\beta[T_f - 28])] - U_L (T_f - T_a)}{1 - (F_c I \eta (28) @ - U_L)/k_e} \qquad (35)$$

where A_A is the absorber area (AR EACR). Note that the program sets FR = 1 (line 2096) for this case.

For the case of constant flow rate, QSR is developed somewhat differently. The output Q_A can now be written (see discussion of equation VII I-A-27 **of volume I).**

$$Q_A = F_r [\alpha I - \eta F_c I - U_L (T_1 - T_a)] \qquad (36)$$

where F_r is the collector heat removal factor and T, is the temperature of the fluid at the Collector inlet. The cell efficiency can be expressed as:

$$\eta = \eta(28)[1 - \beta(T_1 + \Delta T/2 + Q_A k_e^{-} 28)] \qquad (37)$$

where the fluid temperature **rise across the collector is:**

$$\Delta T = \frac{\text{“}}{\varrho C_p f} \qquad (38)$$

where ϱ is the fluid density, C_p is the fluid specific heat, and f is the fluid flow rate. XMASSF (lines 2086, 2140, 2146 corresponds to the denominator of equation (38). CRATIO and the constant are required to convert the inputs provided to the units kW/°CM2 [absorber).

The electric output for those collectors that provide both thermal and electric output Q_E (ESR) is (line *2147).*

$$Q_E = A_A F_r I \eta \qquad (39)$$

The electric output of passively cooled Colectors can also be computed from equation (39). However, the cell temperature T is:

$$\bar{T} = T_a + \frac{\alpha I - F_c \eta I}{k_e} \qquad (40)$$

where k_e is now the overall thermal conductivity between the cells and ambient air. Combining (33), (39), and (40), the electric output (lines 2151, 21 52) is:

$$Q_E = \frac{A_A F_c I \eta (28)\ [1\ \beta(T_a + \alpha I/k_e\ -28)]}{1 - F_c I \beta \eta (28)/k_e} \qquad (41)$$

The output(s) are passed back to the main program after ensuring that they are non-negative (lines 2153 to 21 54). The exit at line 2158 is used if the output computation is skipped for lack of sunlight.

The "output statements" (lines 2162 to 2178) are simply a brief description of the type of collector that has been modeled. The monthly and annual totals of collector output are given in the main program. The "output summary" provides a printout of the collector coefficients that were used in making the run, if requested in the operating instructions for the main program. The three angles shown (lines 2184 to 2186) are converted back to degrees before writing the output summary.

The COLL2 Collector Subroutine

This subroutine computes the output of single axis-tracking collectors with either a north-south polar axis orientation or with a horizontal east-west collector axis. The collectors may provide thermal output, electricity from photovoltaic cells, or both thermal and electric output. This subroutine differs from COLL1 principally in the hourly computations performed. Computation of the incident angle is simpler, computation of shading by adjacent collectors is performed, and a slightly more elaborate computation of thermal losses is performed (to increase accuracy if the Collector is operated over a wide range of output temperatures). A listing of the program appears in appendix I I I-B and a flow diagram for the entry which calculates collector output is shown in figure I I 1-8.

Figure III-8.—Flow Diagram for Computing Hourly Collector Output Using COLL2

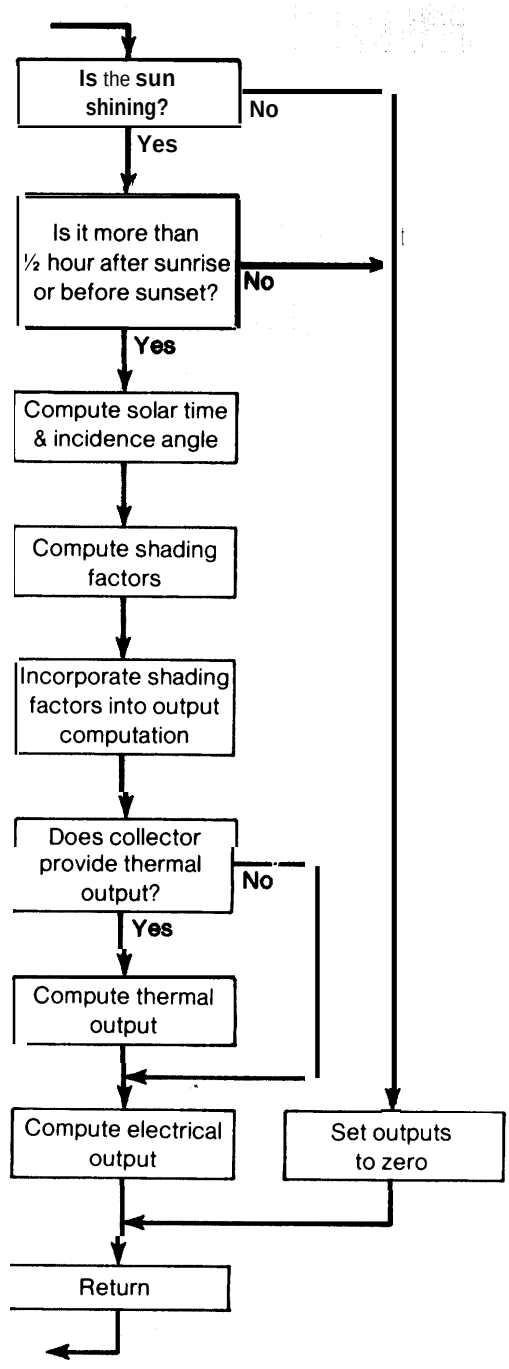

The first part of the program (lines 2000 to 2025) again initializes and contains the first two input prompts. A few variable names differ from COLL1.

The second part of the program contains the format for reading and revising values of collector coefficients.

The section starting with line 2082 differs from the COLL1 program because COLL2 does not require a specified collector tilt and azimuth angle. XMINV is simply 1/(2 • XMASSF) with XMASSF as defined in COLL1. RRR is the fraction of the collector absorber-pipe length that is covered with photovoltaic cells and is zero for collectors that provide only thermal output.

Computation of incident angles is simpler than in COLL1. Line 2113 computes the cosine of the Sun's incident angle for a north-south polar axis collector using equation VII I-A-8. If the collector has an east-west axis, (IEW =1) COSINC is recomputed in line 2118 using equation VII I-A-9.

Collector Shading

Two types of shading can occur in any array of the troughs or single-axis tracking collectors treated in COLL2: 1) shading caused by a row of collectors located to the south of another row of polar-axis collectors; and 2) shading by the adjacent collector during early morning and late afternoon hours (e. g., the collector to the north or south of an east-west axis collector). In theory both of these factors can be eliminated by increasing the spacing between collectors, but in most cases this is not a practical solution because of the great increase in land use that it requires.

For polar tracking arrays, shading of northerly rows by southern rows of collectors is minirna[if the space between the rows is equal to the row width and spacing within a row is reasonable. For east-west tracking arrays, the trough axes are horizontal, and only shading by adjacent collectors is significant. The program therefore assumes that row shading can be eliminated by proper spacing.

The geometry of adjacent-collector shading is illustrated in figure I I 1-9. Assuming that the collector aperture width is W (APWID) and the collector spacing is D (COSPAC), it can be shown that for long collectors the unshaded fraction of the collector is:

Figure III-9.—Sectional View of Parabolic Trough Collectors for Shading Computation

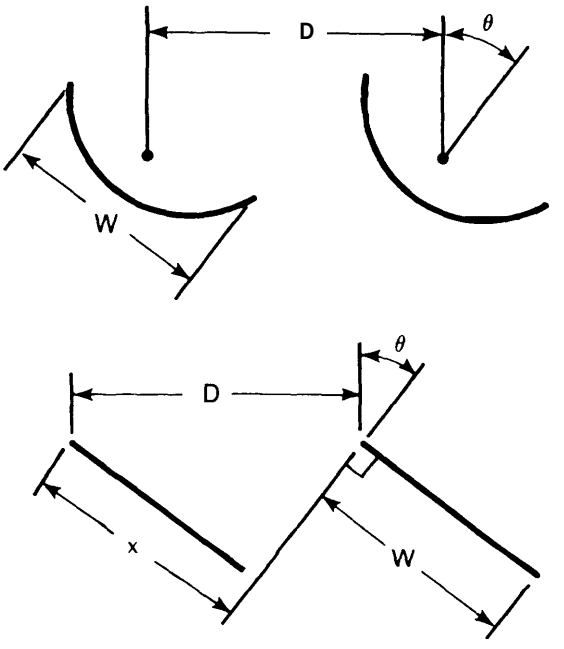

$$\Gamma_1 = \begin{cases} 1 & \text{if } x \geq D \\ x/D, & \text{if } x < D \end{cases} \qquad (42)$$

where $x = D\cos\theta$, and θ is the rotation of the collector about its axis (PHI).

The end losses of one-axis collectors are given by equation VII I-A-20 in volume 1. The fraction of light which can reach the absorber is:

$$\Gamma_2 = 1 - (D/L_t)f|\tan\theta_t|[1 + 1/(48f^2)] \qquad (43)$$

where f = F/D is the f-number of the system and L_t is the collector length. The combined effect of both types of shading and end losses is computed in the line 2132. Note

that line 2125 tests for a condition where the Sun is behind a polar axis collector and sends the program to a RETURN statement if this occurs.

The section beginning with line 2136 completes the computation of the sunlight absorbed by the collector and begins the calculation of thermal output. TRANSM is the fraction of light transmitted through the absorber cover assuming that the cover is approximately perpendicular to the light ray when the collector is pointing directly at the Sun. It is assumed that there is a single cover and TRANS is the transmissivity of the cover at normal incidence. FCIONO is non-zero only if the collector contains photovoltaic cells and if the entire length of the cells is illuminated. It is zero when some cells are shaded by end effects since the electrical output in this case would be very small. When FCIONO is non-zero, it is the product of the cell efficiency (CELLEF), the fraction FC of the absorber width covered with cells, the light intensity incident on the cells, and the ratio of cell length to the collector length (C EL L/CO LEN).

ALPHIO is the average energy absorbed by a unit area (M') of the absorber and corresponds to the product αI discussed for COLL1. ALPHIO is given by (lines 2141 to 21 50):

$$\text{ALPHIO} = \begin{cases} (C_r/L_t)\,\varrho\Gamma_1\tau I_D\cos\theta_i[\alpha(\Gamma_2 L_t - F_c L_c) + F_c\alpha_c L_c] & \text{if } (\Gamma_2 - 0.5)L_t \geq L_c/2 \\ C_r\varrho\tau I_D\cos\theta_i\alpha\Gamma_1\Gamma_2 & \text{if } (\Gamma_2 - 0.5)L_t < -L_c/2 \\ (C_r/L_t)\varrho\tau I_D\cos\theta_i\left\{\alpha(L_t - F_c L_c)/2 + F_c\alpha_c[(\Gamma_2 - 0.5)L_t + L_c/2]\right\}\Gamma_1 & \text{if } |\Gamma_2 - 0.5|L_t < L_c/2 \end{cases} \quad (44)$$

where:

C_r = ratio of collector aperture to absorber area (concentration ratio, (C RATIO))

L_t = total length of collector absorber (COLEN)

L_c = absorber length covered with photovoltaic cells (CELLL)

$\cos\theta_i$ = cosine of incident angle to Sun (COSINC)

α = absorptivity of absorber surface not covered with cells (ALPHA)

α_c = absorptivity of cells (ELECAB)

F_c = fraction of area L_c x (width) actually covered with cells.

It is assumed that a row of photovoltaic cells of length L_c are centered in the I i near absorber whose length is L_t. It can be seen that $(\Gamma_2 - 0.5)L_t \geq L_c/2$ corresponds to the entire cell length, one end section and part of the other end section receiving sunlight. $\Gamma_2 - 0.5)L_t < -L_c/2$ corresponds to less than one end section being illuminated, and $\Gamma_2 - 0.5|L_t < L_c/2$ corresponds to one end section and part of the cell length being in the reflected sunlight.

If the collector provides only electric output, (ISYS = 1), the computation of thermal output is skipped. otherwise, the appropriate collector temperature TTEMP is computed. The calculation of TTEMP depends on whether the collector operates with fixed flu id flow rate (1 FLOW = 1) or with fixed output temperature (I FLOW =2).

The thermal output of collectors operated with fixed output temperature is computed in lines 2159 to 2163. The computation of QL2, which is proportional to the thermal losses (equal to, if there are no solar cells), utilizes two thermal loss coefficients. The efficiency of a collector is not a linear function of temperature; a typical efficiency function is illustrated in figure I I I-10. Particular care must be taken to account for the nonlinearity if the collectors are operated over a wide 'range of temperatures. The algorithm used by the program approximates the efficiency curve with two straight line segments as shown in the figure. The effective incremental thermal losses in the two temperature ranges are computed as follows:

$$J_1 = \frac{(\eta_o - \eta_1)C_r I_D}{T_1 - TO} \quad (45)$$

$$u_2 = \frac{\eta_1 C_r I_D}{T_2 - T_1}$$

If the difference between the average collector temperature and the air temperature (T_f - T_a is greater than the difference T_1 - T_o, then both U_1 and U_2 are used to compute the thermal output. Using the notation which has **been developed in the discussions of COLL1 and COLL2, the thermal output is**

$$QSR = \frac{A_c}{C_r} \frac{\alpha I - F_c I \eta(28)[1-\beta(T_f-28)] - U_1(T_1-T_0) - U_2[T_f-T_a-(T_1-T_0)]}{1 - F_c I \eta(28)\beta/k_e} \quad (46)$$

if $T_f - T_a > T_1 - T_0$

Figure III-10.—Typical Collector Efficiency Curve

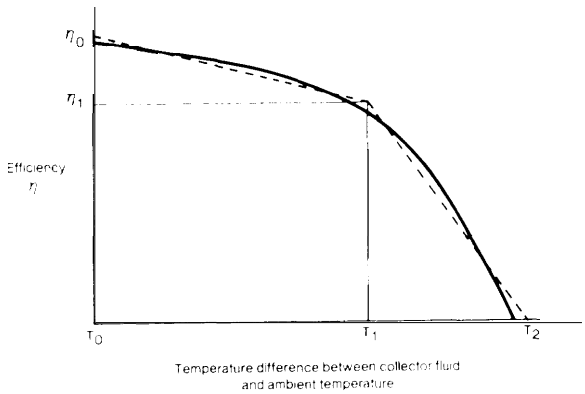

This equation can be derived in a fashion similar to that used in the discussion of COLL1. If $T_f - T_a \leq T_1 - T_0$, then U_2 is not **used and the thermal loss portion of the equation reduces to $U_1(T_f - T_a)$. If one wishes to run the program using a single thermal loss coefficient, set $U_1 = U_2$ and set T_o and T_1 to arbitrary values.**

The thermal output of collectors operated at a fixed flow rate is calculated in lines 2168 to 2173. For this case, the **thermal output is given by:**

$$QSR = \frac{A_c}{C_r} \frac{\alpha I - F_c I \eta(28)[1-\beta(T_f-28)] - U_1(T_1-T_0) - U_2[T_f-T_a-(T_1-T_0)]}{1 + U_2/(2\varrho f C_p C_r) - F_c I \eta(28)\beta[1/k_e + 1/(2\varrho f C_p C_r)]} \quad (47)$$

if $T_i - T_a$ $T_1 - T_o$, As for fixed output temperature, the thermal loss portion reduces to $U_1(T_i - T_a)$ if $T_i - T_a < I_1 - I_0$. The program can also be operated with $U_1 = U_2$ as above. This algorithm implicitly assumes that the flow rate is great enough that the temperature rise across the collector is not so large that the loss calculation will be significantly affected if $T_i - T_a$ is nearly as large as $T_1 - T_o$.

The electric output of collectors that also provide thermal output is computed on line 2175 as:

$$ESR = (A_c/C_r)\, F_c I \eta(28)[1-\beta(T_f + \frac{C_r QSR}{k_e A_c} - 28)] \quad (48)$$

The electric output of **passively cooled Colectors is calculated on line** *2178* **as:**

$$ESR = \frac{A_c}{c,} \frac{F_c I \eta(28)[1-\beta(T_a + \alpha I/k_e - 28)]}{1 - F_c I \eta(28)\beta/k_e} \quad (49)$$

Collector Subroutine COLL3

This subroutine computes the thermal output of a heliostat field. It does **not perform a detailed computation of the shading, blocking, and incidence angles for each heliostat in the field, but rather utilizes output curves computed for a particular field by the University of Houston and modifies these results to account for different latitudes. Since it computes only thermal output and uses a rather simple approximation for the shading and incident angle factors, this subroutine is both shorter and simpler than the other two collector subroutines. The program is listed in appendix III-B and the flow diagram for the output computation of COLL3 is shown in figure I I 1-11.**

The first part of the subroutine again performs initializations and reads input data.

Figure III-11.—Flow Diagram for Computing Hourly Output of a Hellostat Field

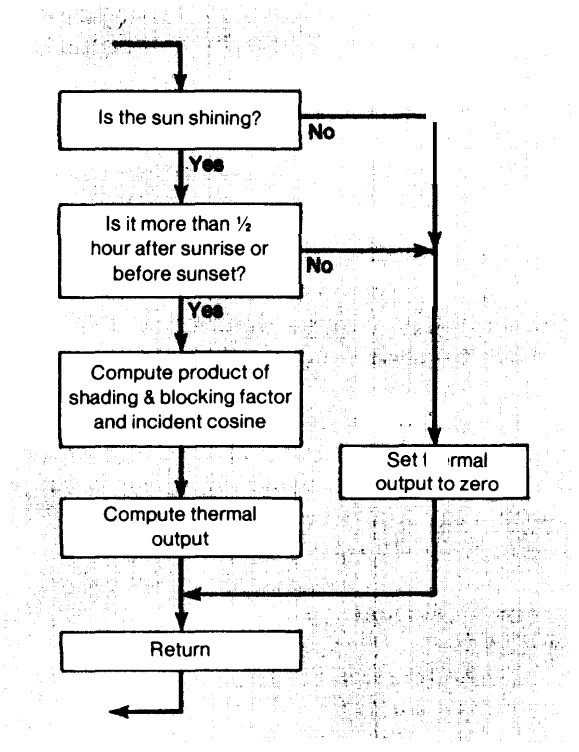

Lines 2013 to 2015 contain data for use in the computation of the absorbed sunlight. Since this subroutine is considerably simpler, it requires only about a third of the input coefficients (lines 2035 to 2042) of the other two subroutines. The solar time and other quantities used in the hourly computation are calculated in lines 2055 to 2065.

This subroutine performs checks to see if the Sun is shining and if it is more than half an hour after sunrise or before sunset just as the other subroutines. The major difference is the manner in which the incident sunlight is computed. N, TD, TB, and TC are all used to compute the factor GAMCOS, which represents the average incident cosine factor and shading factor for the entire heliostat field. GAMCOS is calculated using line segments to determine the maximum input available at each time of the day as discussed in chapter VII I-A and shown in figure VI II-A-4 of volume 1. Once GAMCOS is known, the thermal output QSR is simply the absorbed radiation minus the thermal losses:

$$QSR = \rho\alpha A_c I_D GAMCOS - (A_c/C_r)U_l(T_{fo} - T_a) \quad (50)$$

where T_{fo} is the Collector output temperature.

Note that this subroutine uses the collector area **AREAC instead of the absorber area AREACR in the computation, The thermal losses are based on the output temperature TFOUT since it is assumed that these systems will operate at fixed output temperature and the thermal loss coefficient ULOSS was specified for a particular temperature. Since radiation is the major thermal loss in many such systems, ULOSS is a strong function of the output temperature.**

Proof of Valve Opening Sequence

For a given set of valve settings in the diagram illustrated in figure 2, the amount of electricity (E) and the amount of thermal energy (Q) provided by the system can be written in terms of the amount of high-temperature energy entering the system (Q_H) as follows:

$$E = Q_H \beta \eta_1 (1 + \gamma \alpha_1 \eta_2) \quad \text{(A-1)}$$

$$Q = Q_H [\beta \eta_1 (\alpha_2 + (1-\gamma)\alpha_1) + (1-\beta)] \quad \text{(A-2)}$$

The valve settings depend on the ratio of Q to E, the energy required to meet the loads. Clearly if Q =0 the optimum valve settings are Y= I and ß=1. This situation also holds as long as the minimum amount of thermal energy exhausted in producing the needed electrical output exceeds Q.

Therefore,

If $0 \leq Q/E \leq \alpha_2/(1 + \alpha_1 \eta_2)$ **(A-3)**

Then ß = 1

$\gamma = 1$

If Q/E exceeds $\alpha_2/(1+\alpha_1\eta_2)$, either γ or β must be less than one. At the point where Q/E equals $\alpha_2/(1+\alpha_1\eta_2)$ it is known that the optimum settings are $\gamma=1$ and $\beta=1$. If E is held constant and Q is increased by an incremental amount (ΔQ), and incremental change will be required in Q_H and either γ or β or possibly both γ and β. The incremental change in Q_H required to meet a load E and Q + ΔQ can be computed from equation (A-1) as follows:

$$\Delta E = 0 = (\Delta Q_H/Q_H)E + (\Delta\beta/\beta)E + \Delta\gamma\,[Q_H \beta \eta_1 \eta_2 \alpha_1] \quad \text{(A-4)}$$

$$-\Delta Q_H/Q_H = [1/\beta]\Delta\beta + \frac{\alpha_1\eta_2}{1+\gamma\alpha_1\eta_2}\Delta\gamma \quad \text{(A-5)}$$

As both $\beta=1$ and $\gamma=1$, equation (A-5) reduces to:

$$-\Delta Q_H/Q_H = \Delta\beta + \frac{\alpha_1\eta_2}{1+\alpha_1\eta_2}\Delta\gamma \quad \textbf{(A-6)}$$

In the case γ is not equal to 1, the coefficient of $\Delta\gamma$ would still be less than the coefficient of $\Delta\beta$ if $\alpha_1\eta_2$ is less than one. This will always be the case if η_1 is greater than η_2 (a situation which will hold in all practical cases.) Because energy is conserved we know that

$$\eta_1 + \alpha_1\eta_1 \leq 1 \quad \textbf{(A-7)}$$

or equivalently that

$$\alpha_1\eta_1 < 1 \quad \text{(A-8)}$$

Therefore, if $\eta_2 > \eta_1$ it must be true that $\alpha_1\eta_2 < 1$. Since the coefficient of $\Delta\gamma$ is always less than the coefficient of $\Delta\beta$ in equation (A-5), Q_H is minimized by changing γ while holding β constant at its initial value of one. Therefore:

If $Q/E > \alpha_2/(1+\alpha_1\eta_2)$, and $Q/E < (\alpha_1 + \alpha_2)$, then

$$\beta = 1$$

$$\gamma = \frac{E(\alpha_1+\alpha_2) - Q}{\alpha_1(Q\eta_2 + E)} \quad \text{(A-9)}$$

When (A-9) indicates that $\gamma < 0$ (i.e., $Q > E(\alpha_1+\alpha_2)$, β must be adjusted. Therefore, if:

$Q/E > (\alpha_1 + \alpha_2)$, then **(A-10)**

$$\gamma = 0$$

$$\beta = \frac{E}{E(1-\eta_1(\alpha_1+\alpha_2)) + \eta_1 Q}$$

This proves the sequence stated in the text VIZ, For small values of Q_o/E_o both ß and γ are one. As the ratio increases to a point where demands cannot be met with this valve setting without discarding electrical energy, the valve characterized by γ should be adjusted first, keeping ß=1. The quantity ß should only be reduced from 1 when the optimum setting for γ =0.

TOTIO.PB-PNC/UGFO02 08/17/78 14:41:56

```
1.        % PROGRAM NAME: TOTIO.JB
2.        % JOHN C. BELL
3.        % ENERGY PROGRAM
4.        % OFFICE OF TECHNOLOGY ASSESSMENT
5.        % COMPILED
6.        z     DATE:   l/12/78
7.        z     TIME: 13: 6: 1
8.        % PROGRAM TOTIO.JB FOR RUNNING SOLAR AND NON-SOLAR SYSTEMS
9.        % FILE HANDLING REQUIREMENTS:
10.       %    12—FILE NUMBER FOR GENERAL INPUT IN TOTIO.JB, THE LOAD
11.       %        SBROUTINES, AND THE COLLECTOR SUBROUTINES.  NORMALLY
12.       %        THIS IS EQUATED TO IN$ FOR TERMINAL INPUT.
13.       %    13--FILE NUMBER FOR GENERAL OUTPUT IN TOTIO.JB, THE LOAD
14.       %        SBROUTINES, AND THE COLLECTOR SUBROUTINES.  NORMALLY
15.       %        THIS IS EQUATED TO OUT$ FOR TERMINAL OUTPUT.
16.       %    20--FILE HOLDING HEATING/COOLING LOADS, PROCESS LOADS, AND
17.       %        MISCELLANEOUS ELECTRIC LOADS
18.       %    25—FILE HOLDING WEATHER AND INSOLATION DATA
19.       %    50-–FILE FOR OUTPUTTING HOURLY ELECTRIC BACKUP/SELL DATA
20.       %        (REQUIRED ONLY FOR UTILITY IMPACT ANALYSIS AND DEBUGGING)
21.       %    XX-–FILES HOLDING SYSTEM COEFFICIENTS, CELL COEFFICIENTS, AND
22.       %        ELECTRIC HEATING/COOLING COP'S ARE PROMPTED FOR IN THE
23.       %        MAIN PROGRAM
24.       %
25.       %
26.       % TOTIO.JB MUST BE LINKED TO THE FOLLOWING:
27.       z        UPDATE.JB--ALWAYS
28.       %        ONE LOAD SUBROUTINE
29.       z          LOADS.JB--SINGLE FAMILY HOUSE, INSULATED SINGLE FAMILY
30.       %                   HOUSE, TOWNHOUSE, HIGH OR LOW RISE APARTMENT
31.       %          LOADSC. JB--SHOPPING CENTER
32.       %        ONE COLLECTOR SUBROUTINE
33.       %          COLL1.JB--FLJT PLATE COLLECTORS AND TWO-DIMENSIONAL
34.       %                     TRACKING COLLECTORS
35.       %          coLL?.JB ¨oNE DIMENsIoNAL TRACKING COLLECTORS
36.       %          COLL3.JB-–HELIOSTATS
37.       %        ONE SYSTEM SUBROUTINE
38.       %          HFSYS—HEAT ENGINES WITH FOSSIL BACKUP
39.       %          HESYS--HEAT ENGINES WITH ELECTRIC BACKUP
40.       %          PVSYS--ALL PHOTOVOLTAIC SYSTEMS
41.       %          HWSYS--SOLAR HOT WATER SYSTEMS
42.       %
43.       %
44.
45.       % MISCELLANEOUS INFORMATION
46.       z    --ALL LOADS AND MAXIMUM OUTPUTS ARE IN KILOWATT-HOURS AND
47.       %        KILOWATTS
48.       %    --QSH HOLDS THE SPACE CONDITIONING LOAD
49.       %        --NEGATIVE MEANS A HEATING LOAD
50.       %        --POSITIVE MEANS A COOLING LOAD
51.       %    --HWLOAD HOLDS THE PROCESS (HOT WATER) LOAD
52.       %    --E HOLDS THE MISCELLANEOUS ELECTRIC LOAD PLUS THE FAN AND
53.       %        PUMP LOAD
54.       z    --ELLOAD HOLDS THE MISCELLANEOUS ELECTRIC LOAD
55.       %
1000.     DIMENSION  E(8760),HWLOAD(  168)  ,M(13),IMTH(12)
1001.     DIMENSION  COEF(30),ICOEF(8)  ,TITLE(15)
1002.     DIMENSION FUELMO(12),TOTEM(  12) ,TOTSM(  12),TALTE(12)
1003.     DIMENSION ESRM(12),QSRM(  12),QCCM(  14),QCHM(  14),EEEM(12) ,QPM(12),  %
1004.               TEMPM(12)
```

TOT10.PB-PNC/UGF002 08/17/78 14:41:56

```
1005.     DIMENSION  CPH(2,25),CPC(2,  25)
1006.     DIMENSION  ESE(12),LSE(12),HSE(  12)  ,ESM(12),LSM(12)  ,HSM(12),0LDST(3)
1007.     IMPLICIT  REAL(L)
1008.     COMMON/AXXX/COPA,  EHWEFF,  HCOPM,CCOPM,EFFB,ENGMAX,  EFF1,EFF2,ALPHA1,  %
1009.                 ALPHA2,HTQSTM,LTHTS,HTHTS,   LTQSTM,LTLTS,HTLTS,HLHTH,   %
1010.                 FHWEFF,HLLTH, EFFBE,ESTORM, EFFBAT, PCSIZ, EFFPC,HEATMX, %
1011.                 COOLMX,FAN,TL,TH,KXX,NHTQ,NLTQ,  IGRID,  ISOIAR,IA,ISMTH,  %
1012.                 IHR,IOFFPK
1013.     EQUIVALENCE  (COEF(l),COPA)  ,(ICOEF(l),NHTQ)
1014.     COMMON/CXXX/COPAA,COPEE  ,EBM,  EBEM,EEE,EFFEX,TENCM,  BENGM,ENGM,  %
1015.                 ESR,  ESTOR,EEFF,FFHW,  FHET,  FUEL,HTSSTM,HTQ,HTQI,HT@ ,  %
1016.                 HTQSO,  HTQSTO,LTQI,LTQO  ,LTQSO,LTQSTO,QA,  QC,QC I,QC2,  %
1017.                 QC2Z,QE,QP,QS,QSR,RESID9,   SHET,STHET,TOTTEO,TOTBEO,   %
1018.                 TOTEO,HLHTL,HLLTL,EFFLOT,    EFFST,IPRINT
1019.     COMMON/DXXX/BOLMAX,CPC  ,CPH,EEEM,EHM,  EKMAX,EKMIN,  ESE,ESI,ESIM,  %
1020.                 ESM,ESO,ESOM,  ESRM,ESTMAX,  ESTMIN,  ESTORI,FUELMO,  %
1021.                 HRRUN,  HSE,HSM,HTMAX,  HTMIN,HTQIM,HTQOM,  HTQSTI ,  %
1022.                 IEC,IEH,  IEOMST,IHRAV,  IHRCT,  IOUTS,  J1O,J2O,J3O,LSE,  LSM,  %
1023.                 LTMAX,LTMIN,LTQIM,  LTQOM,  LTQSTI,AMESR,AMQSR,QCCM,  QCHM,  %
1024.                 QC1W,QC1X,QC1Y,QC2W,QC2X,   QC2Y,QPM,QSRM,TALTE,TBAT,   %
1025.                 TEEE,TEMPM,TESR,THTQ,TLTQ,TOTE,TOTEM,TOTS,TOTSM,  %
1026.                 TQP,TQSR,TTEMP
1027.     COMMON/EXXX/TAIRF
1028.     COMMON/XDATA/E,HWLOAD
1029.     DATA  M/1,745,1417,2161,2881  ,3625,4345,5089,  5833,6553,7297,8017,8761  /
1030.     DATA ITBOUT,HTSSTM/1, 1.0E+30/ @HTSSTM IS TEMPORARY HT STORAGE
1031.     READ(12,  98,PROMPT='TITLE:  ')  TITLE
1032.     98    FORMAT(15A4)
1033.     READ(12,  99,PROMPT='SAVE  HOURLY  ELECTRICAL  OUTPUT:  ')  ITST
1034.     IF (ITST.NE. YES') GO TO 9081
1035.     IHROUT=l
1036.     READ(12,  99,PROMPT='PRINT  OUTPUT  TABLES:  ')  ITST
1037.     IF (ITST.EQ.'NO') ITBOUT=O
1038.     IF (ITBOUT.EQ.0) GO TO 4113
1039.     9081    READ(12,  99,PROMPT=%
1040.                 'PRINT MONTHLY TOTALS OF SOLAR/DEMAND VARIABLES: ') ITST
1041.     IF  (ITST.EQ.'YES')  IHRAV=l
1042.     READ(12,99,PROMPT= %
1043.           'PRINT AVERAGE ANE END OF MONTH VALUES OF STORAGE: ') ITST
1044.     IF  (ITST.EQ.'YES')  IEOMST=1
1045.     READ(12,99,PROMPT='PRINT  INPUT  SUMMARY:  ')  ITST
1046.     IF (ITST.EQ. 'YES') IOUTS=l
1047.     4113   READ(12,  99,PROMPT='USE  SEASONAL  PARAMETERS:  ')  ITST
1048.     IF (ITST.NE.'YES ) GO TO 1112
1049.     READ(12,  *,PROMPT='MONTHS  TO  INPUT  CHANGES:  ')  IMTH
1050.     1112   READ(12,*,PROMPT-'FILE NUMBER FOR SYSTEM COEFFICIENTS: ') IF
1051.     IF (IF.LE.0) GO TO 1066
1052.     REWIND IF
1053.     READ(IF) COEF,ICOEF
1054.     1066   READ(12, 99,PROMPT='LIST/CHANGE VARIABLES AND VALUES: ') ITST
1055.     99    FORMAT(A4)
1056.     IF (ITST.EQ.'YES') GO TO 1081
1057.     IF (ITST.EQ.'NO') GO TO 1082
1058.     IF (ITST.EQ. 'NON') GO TO 1080
1059.     GO TO 1066
1060.     1081   WRITE(13,909) (COEF(I),I-1,29)
1061.     909    FORMAT(' _______REAL NUMBERS_  '  /  %
1062.     ' #',4X,'VALUE',4X,'DEFINITION' /%
1063.     '   1' ,IPEIO. 3,'  :ABSORPTION A/C COP (DIM)'/%
1064.     '   2', IPEI0.3, '  :ELECTRIC HOT WATER HEATER EFFICIENCY (.LE.l.00)'/%
```

```
1065.          3 ' ,IRE10.  3,'  :MULTIPLIER FOR ELECTRIC HEATING COP '"S  (DIM)'/%
1066.      '   4 ' ,IPE10.  3,'  :MlLTLTIPLIER FOR ELECTRIC COOLING COP "S  (DIM)'/%
1067.      '   5 ' ,1FE10.3,  '  :BOILER EFFICIENCY (.LE.l.00)'/%
1068.      '   6 ' ,lPE10.  3,'  :MAXIMUM ToPPING ENGINE OUTPUT (KW)'/%
1069.      '   7 ' ,1PE10.3,  '  :EFFICIENCY OF ENGINE #1 (.LE.l.00)'/Z
1070.      '   8 ' ,lPE10.  3,'  :EFFICIENCY OF ENGINE #2 (.LE.l.00)'/%
1071.      '   9 ' ,lPE10. 3,'  :ALPHA 1--HIGH TEMP WASTE HEAT COEFF. (DIM)'/%
1072.      ' 10 ' ,lPE10.  3,'  :ALPHA 2--LOW TEMP WASTE HEAT  COEFF.  (DIM)'/%
1073.      ' 1 1 ' ,1PE10. 3,'  :CAPACITY OF HIGH TEMPERATURE STORAGE (KWH)'/%
1074.      ' 12 ' ,lPE10. 3,'  :LOW TEMP. OF HIGH TEMP.  STORAGE  (DEG  CENT)'/%
1075.      ' 1 3 ' ,1PE10.3,'  :HIGH TEMP. OF HIGH TEMP. STORAGE (DEG CENT)'/%
1076.      ' 14 ' ,lPE10. 3,'  :CAPACITY OF LOW TEMPERATURE STORAGE (KWH)'/%
1077.      ' 15 ' ,1PE10.3,'  :LOW TEMP. OF LOW TEMP. STORAGE (DEG CENT)'/%
1078.      ' 16 ' ,1PE10.3,'  :HIGH TEMP. OF LOW TEMP. STORAGE (DEG CENT)'/%
1079.      ' 1 7 ' ,1PE10.3, '  :HEAT LOSS--HIGH TEMP. STORAGE (KWH/DEG CENT/HR)'/%
1080.      ' 18 ' ,lPE10. 3,'  :EFFICIENCY OF FOSSIL HOT WATER HEATER (.LE.l.00)'/%
1081.      ' 19 ' ,lPE10.3,'  :HEAT  LOSS--LOW  TEMP.  STORAGE  (KWH/DEG  CENT/HR)  '/%
1082.      ' 20 ', 1PE10.3,'  :ENGINE BOILER EFFICIENCY (.LE.l.00)'/%
1083.      ' 21 ', lPE10.3,'  :CAPACITY  OF  ELECTRIC  STORAGE  ('KWH)'/%
1084.      ' 22 ' ,lPE10.3,'  :EFFICIENCY OF ELECTRIC STORAGE (-LE.l.00)'/%
1085.      ' 23 ', 1PE10.3,'  :CAPACITY  OF  ELECTRIC  POWER  CONDITIONER  (l(W)'/%
1086.      ' 24 " ,lPE10.3,'  :EFFICENCY  OF  POWER  CONDITIONING  (.LE.l-00)'/Z
1087.      , 25 ', 1PE10.3,'  :MAXIMUM HEATING LOAD (KW)'/%
1088.      ' 26 ' ,lPElO.3,'  :MAXIMUM COOLING LOAD (KW)'/%
1089.      ' ,27 ', IPElO.3,'  :FAN COEFFICIENT (KW FAN/KW OUTPUT)'/%
1090.      ' 28 ', 1PElO.3,'  :LOW TEMP. FOR OPEN WINDOWs--A/C CUTOFF (DEG F)'/%
1091.      , 29 ', 1PE10.3,'  :HIGH TEMP. FOR OPEN WINDOWS--HT CUTOFF (DEG F)')
1092.      WRITE(13,910)  (ICOEF(J).J=l.  H)
1093.      910    FORMAT('  _________INTEGERS_       _  '  %
1094.      '   #',4X,  "VALUE' ,4x,'Definition'/%
1095.      '   1 ' ,16,4x, '  :HIGH TEMPERATURE STORAGE (MIX(2), NO MIX(l))'/%
1096.      '   2 ' ,16  ,4X,'  :LOW TEMPERATUEE STORAGE (MIX(2), NO MIX(l))'/%
1097.      '   3 ' ,16  ,4X,'  :BACKUP  (FOSSIL  FUEI,(0),  ELECTRIC(l),  BATH)'/%
1098.      '   4 " ,16  ,4x,'  :SOLAR COLLECTOR (NONE(0),FP(l)  ,1D(2),  2D(3),HEL(4))'  /%
1099.      '   5 ' ,16  ,4X,'  :AIR CONDITIONING ON(1) OR OFF(2)'/%
1100.          6 ' ,16,4X,  '  :REGULAR LOADS(0) OR SMOOTHED LOADS(l)'/%
1101.      '   7', 16,4X,'  :SINGLE  FAMILY(0),  HIGH  RISE(l),  SHOPPING  center'/%
1102.      '   8 ' ,16,4x,  '  :BUY OFFPEAK ELECTRICITY (NO(0), YES(l))')
1103.      1082   READ(12,*,PROMPT=,VAR. # AND VARIBLE: ') IV,V
1104.      IF (IV.LE.0) GO To 1067
1105.      IF (IV.GT.30) GO TO 1082
1106.      COEF(IV)=V
1107.      Go TO 1082
1108.      1067   READ(l2,*,PROMPT'VAR.  #  AND  IVARIABLE:  ')  IV,I
1109.      IF (IV.LE.0)  GO TO 1077
1110.      IF (IV.GT.8) GO To 1067
1111.      ICOEF(IV)-I
1112.      CO TO 1067
1113.      1077   READ(12,*,PROMPT- 'FILE NUMBER To STORE SYSTEM COEFF: ') IV
1114.      IF (IV.LE.0) GO To 108O
1115.      REWIND IV
1116.      WRITE(IV)  COEF,ICOEF
1117.      1080   CALL LOADS (TL,TH,FAN,HFATMX, COOLMX, ISMTH, IHR)
1118.      IF  ((NHTQ.NE.1).OR.  (HLHTH.LE.1.E-9)  .OR.  %
1119.          (HTQSTM.LE.  lE-9))  GO TO 876
1120.      READ(5,*,PROMPT=  %
A121.        'HEAT  LOSS  FOR  LT  TANK  OF  HIGH  TEMP  STORAGE  (KWH/DEG  CENT/HR):  ')  %
1122.        HLHTL
1123.      876    IF ((NLTQ.NE. 1).OR. (HLLTH. LE.1.E-9).OR. %
1124.          (LTQSTM.LE.  lE-9))  GO  TO 877
```



```
1125.      READ(5,*,PROMPT-  %
1126.        'HEAT LOSS FOR LT TANK OF LOW TEMP STORAGE (KWH/DEG CENT/HR): ') %
1127.        HLLTL
1128.      877    ATEMPH=25
1129.      ATEMPL=25
1130.      IF  ((HLHTH.GT.0).AND.  (HTQSTM.GT.0))  %
1131.         READ(5,*,PROMPT='ANBIENT TEMP. FOR HT STORAGE (DEG CENT): ') %
1132.          ATEMPH
1133.      IF  ((HLLTH.GT.0).AND.  (LTQSTM.GT.0))  %
1134.         READ(5,*,PROMPT-'AMBIENT  TEMP.  FOR LT STORAGE (DEG CENT): ') %
1135.          ATENPL
1136.      TEMP=HTLTS
1137.      IF (NHTQ.EQ.0) NHTQ-2
1138.      IF (NLTQ.EQ.0) NLTQ-2
1139.      IF (HTQSTM.GT.O.1)  TEMP-HTHTS
1140.      IF (ISOLAR.NE.0) CALL COLL(ISYS)
1141.      IF (IOFFPK.EQ.1)  CALL OFFPK
1142.      READ(12,*,PROMFT-'FILES FOR ELECTRIC H/C COP''S: ')IEH,IEC
1143.      IF (IEH.LE.0)  Go  TO 6654
1144.      REWIND IEH
1145.      READ(IEH)  CPH
1146.      6654    IF (IEC.LE.0) GO TO 6655
1147.      REWIND IEC
1148.      READ(IEC)  CPC
1149.      6655    00 114 1-1,25
1150.      IF (IEH.GT.0)  cPH(2,1)-HcoPM*cPH(2,I)  /(1-HcoPM*cPH(2,I)*FAN)
1151.      IF  (IEC.GT.0)  CPC(2,I)-CCOPM*CPC(2,I)  /(I-2.  5*CCOPM*CPC(2,I)*FAN)
1152.      114    CONTINUE
1153.      READ(12,*,PROMPT-%
1154.        'INITIAL VALUES OF LOW TEMP, HIGH TEMP, AND ELEC STORAGE (KWH): ') %
1155.        LTQSTO,HTQSTO,ESTOR
1156.      ESTORI-ESTOR
1157.      ESTO=ESTOR
1158.      LTQSTI-LTQSTO
1159.      LTQSO=LTQSTO
1160.      HTQSTI-HTQSTO
1161.      HTQSO=HTQSTO
1162.      EFFEX-1.
1163.      EFFLOT=l.O
1164.      EFFST-1.O
1165.      LTMIN-LTQSTM
1166.      HTMIN-HTQSTM
1167.      ESTMIN=ESTORM
1168.      EEFF-EFFPC*EFFBAT
1169.      KKK-1
1170.      Jl0-1          @FIRST  MONTH
1171.      J20-12         @LAST  MONTH
1172.      J30=1          @INTERVAL
1173.      K10-1          @FIRST  HOUR
1174.      K2X-O          @LAST  HOUR-ZERO  FOR  WHOLE  MONTH
1175.      K30-I          @INTERVAL
1176.      1111    CONTINUE  @CHANGE  MONTHS  AND  HOURS  HERE
1177.      ~*************************************************************
1178.      % BEGIN CYCLING THROUGH THE MONTHS
1179.      %*************************************************************
1180.      DO 1000  I-J1O,J2O,J3O
1181.      M3-N(I+l)-M(I)
1182.      K20-K2X
1183.      IF (K2X.EQ.0) K20+M3
1184.      M31-(K20-K10+l)/K30 @ TOTAL HOURS IN THE MONTH
```

TOTI0.PB-PNC/UGFO02 08/17/78 14:41:56

```
%*************************************************************
% BEGIN CYCLING THROUGH THE HOURS OF THE MONTH
%*************************************************************
DO 100 J-K10,K2O,K3O
K-M(I)+J-1 @ K IS THE HOUR OF THE YEAR
KCT-(K-1)/168
KCT-K-168*KCT
IDAY-l+(K-1)/24
QP-HWLOAD(KCT)*(1+0.372*COS (.017214*(IDAY-30)))
CALL LOADS1(K,EEE,QSH,TA)
TAIRF=-459.4+1. 8*TA
IF(QSH.GT.0. ) GO TO 20
QC=QSH   @SETS QC POSITIVE FOR HEATING CASE
COPAA=l.0
COPEE=0
IF(IEH.GT.0) CALL COPT(TAIRF,CPH,COPEE)
GO TO 30
20   QC-QSH
IF (IA.EQ.2) QC=0
COPEE-0
COPAA-COPA
IF (IEC.GT.0) CALL COPT(TAIRF,CPC,COPEE)
30   IF(ISOLAR.EQ.0) GO TO 146
IF (HTQSTM.GE.0.1) GO TO 133
IF (LTQSTM.LE.0. l) GO TO 4140
F-LTQSTO/LTQSTM
IF (NLTQ.EQ.1) co TO 4135
TIN=LTLTS+F*(HTLTS-LTLTS )
GO TO 140
4135   TIN=LTLTS
IF (F.LT.0) TIN=LTLTS+F*(HTLTS-LTLTS )
GO TO 140
133   F-HTQSTO/HTQSTM
IF (NHTQ.EQ.1) GO TO 135
TIN=LTHTS+F*(HTHTS-LTHTS )
GO TO 140
135   TIN=LTHTS
IF (F.LT.0) TIN=LTHTS+F*(HTHTS-LTHTS)
GO TO 140
4140   TIN-LTLTS
140   IF ((LTQSTO.GT.O.99*LTQSTM) .AND. (COPAA.LE.0.001) .AND. %
     (QSH.GE.0) .AND. (ISYS.EQ. 2)) TIN=TA-263
CALL COLL01(K,TIN,TEMP,TA,QSR, ESR)
AMQSR=AMAX1(AMQSR,QSR)
ANESR=AMAX1 (AMESR,ESR)
LX) TO 147
146 QSR=O
ESR=0
147 E(K)=0.
TESR=TESR+ESR
TQSR=TQSR+QSR
TEEE=TEEE+EEE
IF (QSH.GT.0) QCCM(14)-QCCM(14)+QC
IF (QSH.LT.0) QCHM(14)=QCHM(14)+QC
TQP=TQP+QP
TTEMP=TTEMP+TAIRF
IHRCT=IHRCT+l
EEEM(I)-EEE14(I)+EEE
QPM(I)-QPM(I)+QP
IF (QSH.GT.0) QCCM(I)=QCCM(I)+QC
```

TOTIO.PB-PNC/UGFO02 08/17/78 14:41:56

```
IF (QSH.LT.0) QCHM(I)-QCHM(I)+QC
QSRM(I)-QSRM(I)+QSR
ESRM(I)=ESRM(I )+ESR
TEMPM(I)-TEMPM(I)+TAIRF/M3 1
LTQSO=LTQSTO
HTQSO=HTQSTO
%*********************************************************h*****
CALL SYSTEM(K,QSH)
%*************************************************************
IF (QSH.LE.0) GO TO 9911
QC1X-AMAX1 (QC1X,QC1)
QC2X=AMAX1(QC2X,QC2+QC2Z )
GO TO 9910
9911   QC1Y=M1(QC1Y,QC1)
QC2Y=AMAX1(QC2Y,QC2+QC2Z)
9910   IF (QSH.LT.0) QCIW=AMAXl (QClW,QCl+QC2tQC2Z)
IF (QSH.GT.0) QC2W AMAX1 (QC2W, QC1+QC2+QC2Z)
IF (IGRID.NE.1) EHM=AMAXl (EHM,FFHW)
TBAT=TBAT+ESTOR
THTQ=THTQ+HTQSTO
TLTQ=TLTQ+LTQSTO
BOLMAX=AMAX1 (BOLMAX,FUEL-FUELII)
HTMAX-AMAX1 (HTMAX,HTQSTO)
HTMIN=AMIN1 (HTMIN,HTQSTO)
LTMAX-AMAX1 (LTMAX,LTQSTO)
LTMIN=AMIN1(LTMIN,LTQSTO)
ESTMAX=AMAX1 (ESTMAX,ESTOR)
ESTMIN=AMIN1 (ESTMIN,ESTOR)
IF (IGRID.EQ.0) GO TO 906
EKMAX=AMAX1( EKMAX,E(K))
EKMIN=AMIN1 (EKMIN,E(K))
906   FUELII=FUEL
LTQ-LTQSTO-LTQSO
ES=ESTOR-ESTO
ESTO=ESTOR
IF (LTQ.LT.0) GO TO 9400
LTQI=LTQI+LTQ
LTQIM=AMAX1 (LTQIM,LTQ)
GO TO 940l
9400   LTQ0=LTQ0-LTQ
LTQOM=AMAX1(LTQOM,-LTQ)
9401   IF (HTQ.LT.0) GO TO 9402
HTQI=HTQI+HTQ
HTQIM=AMAX1 (HTQIM,HTQ)
GO TO 9403
9402   HTQO=HTQ0-HTQ
HTQOM-MAX1 (HTQ0M,-HTQ)
9403   IF (ES.LT.0) GO TO 9404
ESI=ESI+ES
ESIM=AMAX1 (ESIM,ES)
CO TO 9405
940&   ESO=ESO-ES
ESOM=AMAX1 (ESOM,-ES)
9405   IF (E(K) .LT.0) GO TO 7011
IF (IGRID.EQ.0) GO TO 101
TOTE=TOTE+E(K)
GO TO 101
7011 TOTS=TOTS-E(K)
101   ESM(I)=ESM(I)+ESTOR
IF (HTQSTM.LE.1.E-9) GO TO 3052
```

```
3051.      F=HTQSTO/HTQSTM
3052.      IF (ICOEF(1).EQ.2) GO TO 3053
3053.      IF (F.GT.1) GO TO 3053
3054.      IF (F.LT.0) GO TO 3058
3055.      HTQSTO=HTQSTO-(F*HLHTH*(HTHTS-ATEMPH)+(1-F)*HLHTL*(LTHTS-ATEMPH))
3056.      GO TO 3052
3057.      3058   HTQSTO=HTQSTO-(HLHTL*((HTHTS-LTHTS)*F+LTHTS-ATEMPH))
3058.      GO TO 3052
3059.      3053   HTQSTO=HTQSTO-(HLHTH*((HTHTS-LTHTS)*F+LTHTS-ATEMPH))
3060 .     3052   IF (LTQSTM.LE.1.E-9) GO TO 3061
3061.      F=LTQSTO/LTQSTM
3062.      IF (ICOEF(2).EQ.2) GO TO 3056
3063 .     IF (F.GT.1) GO TO 3056
3064.      IF (F.LT.0) GO TO 3060
3065.      LTQSTO=LTQSTO-(F*HLLTH*(HTLTS-ATEMPL)+(1-F)*HLLTL*(LTHTS-ATEMPL))
3066.      GO TO 3061
3067.      3060   LTQSTO=LTQSTO-(HLLTL*((HTLTS-LTLTS)*F+LTLTS-ATEMPL))
3068.      GO TO 3061
3069.      3056   LTQSTO=LTQSTO-(HLLTH*((HTLTS-LTLTS)*F+LTLTS-ATEMPL))
3070.      3061   LSM(I)=LSM(I)+LTQSTO
3071.      HSM(I)=HSM(I)+HTQSTO
3072.      100    CONTINUE
3073.      %*****************************************************************
3074.      % END CYCLE OF HOURS THROUGH THE MONTH
3075.      % CALCULATE VARIOUS MONTHLY TOTALS
3076.      %*****************************************************************
3077.      ESE(I)=ESTOR
3078.      LSE(I)=LTQSTO
3079.      HSE(I)=HTQSTO
3080.      TOTEM(I)=TOTE-TOTEI
3081.      TOTEI=TOTE
3082.      TOTSM(I)=TOTS-TOTSI
3083.      TOTSI=TOTS
3084.      FUELMO(I)=FUEL-FUELI
3085.      FUELI=FUEL
3086.      TALTE(I)=RESID9-RESID8
3087.      RESID8=RESID9
3088.      ESM(I)=ESM(I)/(AMAX1(1,ESTORM)*M31)
3089.      LSM(I)=LSM(I)/(AMAX1(1,LTQSTM)*M31)
3090.      HSM(I)=HSM(I)/(AMAX1(1,HTQSTM)*M31)
3091.      HRRUN=HRRUN+M31
3092.      IF (I+1.NE.IMTH(KKK)) GO TO 1000
3093.      WRITE(13,3777) IMTH(KKK)
3094.      3777   FORMAT(´ ENTER SEASONAL PARAMETERS FOR MONTH: ´,I2)
3095.      DO 447 KZJ=1,3
3096.      447    OLDST(KZJ)=COEF(13+KZJ)
3097.      KKK=KKK+1
3098.      1113   READ(12,*,PROMPT=´VAR. # AND VARIABLE: ´) IV,V
3099.      IF (IV.LE.0) GO TO 3778
3100.      COEF(IV)=V
3101.      GO TO 1113
3102.      3778   LTQSTO=(LTQSTM/(OLDST(3)-OLDST(2)))* %
3103.             (((LTQSTO/LTQSTM)*(OLDST(3)-LTLTS))+ %
3104.             ((1-LTQSTO/LTQSTM)*(OLDST(2)-LTLTS)))
3105.      LTQSTM=LTQSTM*(HTLTS-LTLTS)/(OLDST(3)-OLDST(2))
3106.      1000 CONTINUE
3107.      %*****************************************************************
3108.      % END CYCLE OF MONTHS THROUGH THE YEAR
3109.      % CALCULATE VARIOUS YEARLY TOTALS AND DO OUTPUT
3110.      %*****************************************************************
```



```
3111.      CALL MMDDYY (INOM, IYAD, IRY)
3112.      CALL HHMMSS(IRH, INIM, ICES)
3113.      WRITE( 13, 2660) TITLE, INOM, IYAD, IRY
3114.      2660   FORMAT ( / /1X, 15A4 , '      DATE :  , 12,'- /, ,I2, '/' , 12)
3115.      WRITE (13,2666) IRH, INIM,ICES
3116.      2666   FORMAT ( 61 X , '      TIME: ',12, ':', 12, ': ',12/)
3117.      IF (ITBOUT. NE.1) GO TO 4112
3118.      IF (IPRINT. EQ.1) WRITE( 13,2777)
3119.      2777   FORMAT (/' PHOTOVOLTAIC SYSTEM')
3120.      IF (I PRINT .EQ.2) WHITE (13,2778)
3121.      2778   FORMAT (/' HEAT ENGINE SYSTEM')
3122.      IF (I PRINT .EQ.3) WRITE (13,2779)
3123.      2779   FORMAT (/' HOT WATER SYSTEM')
3124.      IF (I GRID. EQ.0) WRITE( 13,2780)
3125.      2780   FORMAT ( ' FOSSIL FUEL BACKUP' )
3126.      IF (IGRID.EQ.1) WRITE(13,2781)
3127.      2781   FORMAT(' ELECTRIC BACKUP')
3128.      IF (IGRID.EQ.3) WRITE(13,2782)
3129.      2782   FORMAT(' ELECTRIC AND FOSSIL FUEL BACKUP')
3130.      IF (ISOLAR.NE.0) CALL COLL02
3131.      CALL LOADS2
3132.      IF (I0FFPK.EQ.1) CALL OFFPK2
3133.      IF (IOUTS.NE.1)  GO TO 4112
3134.      WRITE(13,3)
3135.      3    FORMAT(//' SYSTEM COEFFICIENTS:' )
3136.      WRITE(13,909) (COEF(I), I=1,29)
3137.      WRITE(13,910) (ICOEF(I),I=1,8)
3138.      IF ISOLAR.EQ.0) GO TO 4112
3139.      WRITE(13,4)
3140.      4   FORMAT(//' COLLECTOR COEFFICIENTS:')
3141.      CALL COLL03
3142.      IF ((HTQSTM.LE. IE-9).AND. (LTQSTM.LE. lE-9)) GO To 4112
3143.      WRITE(13,950)
3144.      950    FORMAT(//llX,'STORAGE HEAT LOSS COEFFICIENTS' //2lX, %
3145.             'HEAT LOSS', 12x, 'AMB. TEMP'/l7x, '(KWH/DEG CENT/HR)'> 7x, %
3146.             '(DEG. CENT)')
3147.      IF (NHTQ.EQ.2) WRITE(13,951) HLHTH,ATEMPH
3148.      951    FORMAT(' HT STORAGE',9X, 1PE10.3, 14X,0PF5.1)
3149.      IF (NHTQ.EQ.1) WRITE(13,952) HLHTH,HLHTL,ATEMPH
3150.      952    FORMAT(' HT STORAGE", 2X,1PE10. 3,' --', IPE10.3,8X,0PF5. 1)
3151.      IF (NLTQ.EQ.2) WRITE(13,953) HLLTH,ATEMPL
3152.      953    FORMAT(' LT STORAGE', 9X,1PE10.3, 14X,0PF5.1)
3153.      IF (NLTQ.EQ.1) WRITE(13,954) HLLTH,HLLTL,ATEMPL
3154.      954    FORMAT(' LT STORAGE',2X, 1PE10.3, ' --', lPEI0.3,8x,OPF5.1)
3155.      IF  ((NHTQ.EQ.1).OR. (NLTQ.EQ.1)) WRITE(13,955)
3156.      955    FORMAT(/' NOTE: FIRST HEAT LOSS NUMBER IS FOR HT TANK' %
3157.                    ' OF THE PARTICULAR'/'        STORAGE; ', %
3158.                    'SECOND IS FOR LT TANK OF THE SAME STORAGE.')
3159.      4112   CALL OUTTAB(ITBOUT, IHROUT)
3160.      END
```

```
OUTTAB . PB-PXL/L'Lk'002 08/ 17 / 78 14 : 44 : 5 1)

1.          , PROGRAM ': AME :  OUTT 113. JB
2.          % I{) H', ( . BELL
3.          .  ENERGY PROGRAM
4.            (ØFF I C F () F TECHNOLOGY ASS F S SMENT
5.            COMPI LED
6.                 DATE :    1 / 1 2/78
7.                 TIM F : 13 : 6:25
8.          4PROGRAM OUTTAB. JB FOR TABULAR OUT PUT OF DATA
9.          "            BY US IN C S EGMENT EDIT NKING, THIS PROGRAM
10.                      WILL ALLoW OUTPU1 OF ALL DAT A
11.
12.
13.
1 000.      SUBROUT I N F OU 1 I AB(ITBOUT,IHROUT)
1 000.      DIMENSIONE( &760 )
1 002.      3TMP(S IONP UE LMO ( 1.!) , TOTEM(12),TOTSM(12),TALTE(12)
1 003 .     DIMENSIONESRM(12),(j SLY ( 12 ) , QCCM ( 14 ) , QCHM ( 14 ) , EE EM ( 1 2 ) , QPM ( 1 2 ) , '
1004.                 TEMPM(12),IEXP ( 1 4 )
1005.       D I M E N S I O N C Ph ( 2, .! 5 ) , C P( ( 2,25 )
1 006.      D I M E N S I O N E S E ( 1 2 ) , LS E ( 1 2 ) , HSE ( 12 ) , 1 SM ( 1 2 ) , LSM ( 1 2 ) , HSM(12)
1007.       IMPL IC I T PEAL(L)
1008.       COMMON/AXXX /TEM PV 1 ( 10 ) , HTQSTM,T EM PV' 2 ( 2 ) , LTQSTM , TEMPV 3 ( b ) , %
1009.                    ES FORM > TEMPV4 ( 5 ) , FAN, T EMPV 5 ( 3 ) , ITM PV 1 ( 2 ) , IGR ID , %
1010.                    ITMPV2 ( 5 )
1011.       ( OMMON / CXXX /("0 PAA , LO PEE, EBM, EBEM, EE E, EFFEX, TENGM, BENGM, ENGM, %
1 012.                   ESR , ES TOR , EE FF , FFHW , FHE T , FUEL , HTS STM, 1iTQ , HTQ1 , H TQ0 , %
10 13.                   HTQSO , HTQSTO , LTQI , I TQO , LTQSO, LTQSTO, QA, Q(", QC1, QC2, %
1014.                    QC2Z, QE, QP, QS, QSR, RES ID9 , SHET , STHET, TOTTEO, TOTBEO, %
1015.                    iL) IEO, HLHT L, HLLT L, EFFLOT, EFF ST, I PR IN T
1016.       COMMON / DXXX /BOLMAX , C PC , C PH , EEEM , EHM , EKMAX , EKMIN , ES E , ES I , ES IM , %
1017.                    ESM , ESO , ESOM , ESRM , ESTMAX , ESTM IN , ESTOR I , FL' ELMO , %
l018.                    HR RUN, HS F, HSM, HTMAX, HTM IS, HTQ I M, HTQOM, HTQ ST I , "
1019.                    IEC , I EH , I EOMST , IHRAV , IHRCT , IOUTS , J 10, J2 0, J 30 , 1,S E , LSM , '.
1020.                    LTMAX, LTM I>; , LTQIM, 1. TQOM , LTQST L , AMESR , AMQSR, QCCM, QCHM, %
102 1 -                  QC 1!+", QC I X , QC I Y , QC 2W , QC 2X , QC 2Y , QPM , QSRM , TALT E , TBAT , %
1022.                    TEEE , TEM PM , TESR , THTQ , TLTQ , TO TE , TO I EM, TOTS, TOTS}!, .
1023.                    TQP , TQSR , T TEMP
1024.       COMMON /XDATA/ E , HWLO AD
3000.       IF ( ITBOUT . NI .1 ) GO TO 5000
3001.       I F ( I OUTS. NE. 1 ) GO TO 20 11
3002.       IF [ ( I E H . L 1 .1 ) . AND . ( I EC . LT .1 ) ) GO TO 20 11
3001.       .***  ******************  •*********************  •****************
3004.       W R IT E ( 1 3, 22 )
3005.       22    FORMAT ( / / 7X, ' EL ECTR I ( H / , Co 1' ' ' S ( KWH /KWH ) " )
3006.       W SIT E ( 13, 23 )
3007.       23    F O R M A I (4X, ' TEMP ' ,4X, ' HEAT ' ,8X , 'TI MP ' , .,.\, ' COOL ' )
3008.       1(-S =0
3009.       IHS =0
3010.       I F ( I rC . LI .1 ) I (" S=1
3011.       I E ( IEH. LT .1 ) IHS= 1
3012.       DO 119 I = 1, 25
3013.       I F ( C PC ( 1, I ) .1. I . -99 . ) I C S = 1
3014.       I F ( C PH ( I , I ) . L 1.-99. ) I IIS = 1
3015.       IF ( ( 1 HS . EQ .1 ) . AND . ( I C S . EQ. 1 ) ) GO TO 1 20 I I
3016.       1 F ( ( I HS . NE . 1 ) . AND . ( IC S . NE . 1 ) ) W R IT F ( 1 3, .!+ )
3017.               C PH ( 1 , I ) , (PH(2 , I) / ( 1+PH ( 2 , I ) *FAN) , %
3018 .              C PC( 1, I ) , (PC ( 2 , I )' ( 1 +.7. 5*C PC ( 2,I) * FAN)
3019.       I F ( I [' S . EQ .1 ) W R IT [ ( I 3,2>) ( PH ( 1 , I ) , ( PH ( 2 , I ) ( 1 +PH ( 2 , I ) * t AN)
3020.       I F ( IHS . EQ .1 ) W R I T E ( 13, 26)PC(1 ,I ), (C PC( 2,I) / ( I +2. 5*(PC( 2,I) * FAN)
3021.       11 9 C O N T I N U E
```

```
OUTTAB .PB-PNC/UGF002 08/ 17/78 14: 44: 51

3022.       24    FORMAT ( 3X, F 5.1, 2X, F6 .2, 7X, F5 .1, 2X, F6 . '2)
3023.       25    FORMAT ( 3X, F5 .1, 2X, F6 .2, 9X, ' --' , 6X, ' --' )
3024.       26    FORMAT ( 5X, ' --' , 6X, ' --' ,8X, F5 .1, 2X, F6 . 2 )
3025.       Z****  ************************  *****  ************************
3026.       2011    EFACT=AMAX1 ( 1, ESTORM)
3027.       BATLF=TBAT/ (HRRUN*EFACT )
3028.       EFACT=AMAX 1 ( 1, HTQSTM)
3029.       HTLF=THTQ/ ( HRRUN*EFACT )
3030.       EFACT=AMAX 1 ( 1, LTQSTM )
3031.       LTLF=TLTQ/ (HRRUN*EFACT )
3032.       EFACT=AMAX1 ( 1 ,TENGM)
3033.       ENGLFT=TOTTEO/ (HRRUN*EFACT )
3034.       EFACT=AMAX1 ( 1, BENGM)
3035.       ENG LFB=TOTBEO/ ( HRRUN*EFACT )
3036.       EFACT=AMAX1 ( 1, ENGM)
3037.       ENGLF=TOTEO/ ( HRRUN*EFACT )
3038.       EFACT=O
3039.       Do 4110 I= J10, J20, J30
3040.       IF (ABS (TALTE ( I ) ).LE. 1.00) TALTE ( I ) =0
3041.       4110    EFACT=EFACT+TALTE ( I )
3042.       WRITE (13 ,4113 )
3043.       4113 FORMAT ( / / 7X, ' ELECTRICITY AND FOSS 11, FUEL BACKUP DEMANDS (KWH ) ' )
3044.       WRITE ( 13, 1005)
3045.       1005 FORMAT ( ' MONTH' , 4X, ' ELEC . BUY ' , 4X, ' ELEC . SF. LL ' ,4X , ' FUEL USE ' , %
3046.             3X, ' EXCESS LT ENERGY' )
3047.       WRITE ( 13, 1006) (1, TOTEM(I) , TOTSM ( I), FUELMO ( I ), TALTE ( I ) , I= 110, J20, J 30 )
3048.       1006 FORMAT( ' ' ,13, 4X, IPE 10.3, 4x, IPE 10.3, 4X, 1PE 10.3, 5X, 1 PE 10.3 )
3049.       WRITE ( 13, 1007) TOTE, TOTS, FUEL, EFACT
3050.       1007 FORMAT ( ' TOTAL' , 2X, IPE 10.3, 4X, 1PE 10.3, 4X, IPE 10.3, 5X, 1PE 10. 3 )
3051.       IF ( ( IGRID . EQ . 0) .AND . ( I PRINT . EQ. 1 ) ) WRITE ( 13, 4007)
3052.       4007 FORMAT ( ' NOTE:   ELEC SELL IS DC ELECTR IC ITY THAT CAN ' ' T ' , %
3053.                          'BE STORED IN THE BATTER}" )
3054.       %*****************  ******************  ******************  ****
3055.       QCHM( I 3)= QCHM( 14 ) /IHRCT
3056.       QCCM( I 3)=QCCM( 14) /IHRCT
3057.       DO 66 1=1, 14
3058.       TEST=QCCM ( I )
3059.       IF (QCHM ( I ) .GT. QCCM( I ) ) TEST= QCHM( I )
3060.       DO 65 J=1 , 10
3061.       IF (TEST/( 10**J) . LT .1. 00) GO TO 64
3062.       65    CONT INUE
3063.       64    IEXP ( I ) =J-1
3064.       DI V= 10** (J-1 )
3065.       QCHM ( I ) =QCHM ( I ) /D IV
3066.       QCCM( I )= QCCM(I ) /D IV
3067.       66    CONTINUE
3068.       IF ( IHRAV. NE. 1 ) GO TO 9059
3069.       WR ITE ( 13, 7 705)
3070.       7705    FORMAT (// 26X , 'TOTAL MONTHLY VALUE S (KWH ) ' , 24X, ' AVER ' / %
3071.             7X, ' PHOTO VOLT' ,6X , ' SOLAR ' ,6X , '_____' , %
3072.             ' INTERNAL DEMANDS ' , '_ _ _____' , 7X, ' TEM P ' / %
3073.             ' MONTH ' , IX, ' ELECTRIC ' ,6X , ' THERMAL ' , 5x, ' ELECTRIC " , %
3074.             5x, " HEAT/COOL , 5x, 'HO r WATER' , 7x, ' (F. ) ' )
3075.       WRITE ( 13, 7707) (1, ESRM(I ) , QSRM ( I ) , EEEM ( I ) , QCHM( I ) , QCCM( I ) , %
3076.                    IEXP ( I ) , QPM ( I ) , TEMPM ( I ) , I=J10,J20 , J 30)
3077.       7707    FORMAT ( ( ' ' , I X , I 2 , 2X, 2 ( I PE 10.3, 3X) , I Pr 10.3, 2X, OPF4 .2, ' / ' , %
3078.                    OPF4 .2, ' E+00' , T 57, I 1, 2X, IPE 10. 3, 7X, OPF4 . 1 ) )
3079.       %WR I r E ( I 3, 7710 ) TF SR / I HRCT, TQSR/ I HRCT, TEEE/ I HRC T, QCHM ( 13 ) , %
3080.       %                QCCM ( 13 ) , T EXP ( 13 ) , TQP/ IHRCT , 1 TEMP/IHRCT
3081.       %7 710    FORMAT ( ' YR AV ' , 2 ( I PE 10. 3, 3X ) , 1 PE 10. 3, 2X, OP F4 . 2, ' / ' , %
```

```
3082.    %                 0PF4.2,'E+00',T57,I1,2X,1PE10.3,7X,0PF4.1)
3083.    GO TO 9053
3084.    9059   WRITE(13,7706)
3085.    7706   FORMAT(//31X,'YEARLY TOTAL (KWH)'/ %
3086.          7X,'PHOTOVOLT',6X,'SOLAR',6X,'_______ _ _', %
3087.          'INTERNAL DEMANDS','_____ _____',7X,'TEMP'/ %
3088.          7X,'ELECTRIC',6X,'THERMAL',5X,'ELECTRIC', %
3089.          5X,'HEAT/COOL',5X,'HOT WATER',7X,'(F.)')
3090.    9053   WRITE(13,7715) TESR,TQSR,TEEE,QCHM(14),QCCM(14),1EXP(14),TQP
3091.    7715   FORMAT(' TOTAL',2(1PE10.3,3X),1PE10.3,2X,0PF4.2,'/', %
3092.                 0PF4.2,'E+00',T57,I1,2X,1PE10.3,7X,' -- ')
3093.    %*************************************************************
3094.    IF (IEOMST.NE.1) GO TO 9054
3095.    WRITE(13,4089)
3096.    4089   FORMAT(//17X,' LOAD FACTOR  ',19X,'END OF MONTH VALUES'/%
3097.                 7X,'_______-', 'OF S TORAG F ( KWH ) ', '       _ ',%
3098.                 3X, '_______ ' ,  '  OFSTORAGE( KWH)_, '.____'1  -
3099.                 'MON TH ', 1 X ,- %
3100.                 'ELECTRIC',4X,'LOW TEMP',4X,'HIGH TEMP',3X, %
3101.                 'ELECTRIC',4X,'LOW TEMP',4X,'HIGH TEMP')
3102.    WRITE(13,4080) (I,ESM(I),LSM(I),HSM(I),ESE(I),LSE(I),HSE(I), %
3103.                   I=J10,J20,J30)
3104.    4080   FORMAT((2X,I2,2X,6(1PE10.3,2X)))
3105.    %*************************************************************
3106.    9054   WRITE(13,9000)
3107.    9000   FORMAT(//47X,'STORAGE VALUES')
3108.    WRITE(13,9001)
3109.    9001   FORMAT(36X,'ELECTRIC',6X,'LOW TEMP',6X,'HIGH TEMP')
3110.    WRITE(13,9002) BATLF,LTLF,HTLF
3111.    9002   FORMAT(' LOAD FACTOR (DIM):',14X,3(2X,1PE10.3,2X))
3112.    WRITE(13,9003) ESTORI,LTQSTI,HTQSTI
3113.    9003   FORMAT(' INITIAL VALUE (KWH):',12X,3(2X,1PE10.3,2X))
3114.    WRITE(13,9004) ESTOR,LTQSTO,HTQSTO
3115.    9004   FORMAT(' FINAL VALUE (KWH):',14X,3(2X,1PE10.3,2X))
3116.    WRITE(13,9006) ESTMIN,LTMIN,HTMIN
3117.    9006   FORMAT(' MINIMUM VALUE (KWH):',12X,3(2X,1PE10.3,2X))
3118.    WRITE(13,9005) ESTMAX,LTMAX,HTMAX
3119.    9005   FORMAT ' MAXIMUM VALUE (KWH):',12X,3(2X,1PE10.3,2X))
3120.    WRITE(13,9007) ESI,LTQI,HTQI
3121.    9007   FORMAT ' TOTAL ENERGY PUT INTO (KWH):',4X,3(2X,1PE10.3,2X))
3122.    WRITE(13,9008) ESO,LTQO,HTQO
3123.    9008   FORMAT ' TOTAL ENERGY TAKEN OUT OF (KWH):',3(2X,1PE10.3,2X))
3124.    WRITE(13,9009) ESIM, ITQIM , -iTI'1
3125.    9009   FORMAT ' MAXIMUM I NPUT IN TO PC  (KWH/HR) : ' , 1X,3 ( 2X,1PE10.3,2X) )
3126.    WRITE(13,9010) F SOM , LTQOM , HTQOM
3127.    9010   FORMAT(' MAXIMUM OUTPUT INTO PC (KWH/HR):',3(2X,1PE10.3,2X))
3128.    %*************************************************************
3129.    IF (TOTEO.LT.0.1) GO TO 8056
3130.    WRITE(13,8001)
3131.    8001   FORMAT(//47X,'ENGINE VALUES')
3132.    WRITE(13,8002)
3133.    8002   FORMAT(38X,'LOAD',10X,'TOTAL',8X,'MAXIMUM'/ %
3134.          37X,'FACTOR*',7X,'OUTPUT*',7X,'OUTPUT*')
3135.    WRITE(13,8003) ENGLFT,TOTEO,TENGM
3136.    8003   FORMAT(' TOPPING ENGINE:',17X,3(2X,1PE10.3,2X))
3137.    WRITE(13,8004) ENGLFB,TOTBEO,BENGM
3138.    8004   FORMAT(' BOTTOMING ENGINE:',15X,3(2X,1PE10.3,2X))
3139.    WRITE(13,8005) ENGLF,TOTEO,ENGM
3140.    8005   FORMAT(' TOTAL ENGINES:',18X,3(2X,1PE10.3,2X))
3141.    WRITE(13,8006)
```



```
3142.    8006   FORMAT ( ' *NOTE :   LOAD FACTOR 13 ASED ON AC TUAL MAX 1 MUM ' , '
3143.           ', NOT ON DES IGN MAXI IMUM . ' )
3144-    %********* ********* ********* *********  ********* ********* ****
3145.    8056   WRITE ( 13, 107 I )
3146.    1071   FORMAT ( / / 23X, ' MAX IMUM SPAC E COND IT ION 1 NG LOADS ' /
3147.           21X, ' ELECTRIC ' , 7X, ' THE, RMAL ' , XX, ' TOTAL ' )
3148.    WRITE ( 13, 9011 ) QC 1X, QC 2X, QC 2W , QC 1Y , QC 2Y , QC IW
3149.    9011   FORMAT ( '  COOLI NG ( KWH ) : ' , 4X, 3 (2X, 1 PE 1 c. 3, 2X ) / %
3150.                  ' HEATING (KWH ) : ' , 4X , 3 ( 2X, 1 PE 10.3, 2X) )
3151.    %********** ********* ********* ********* ********* ********* **
31 5.?.  WRITE ( 13, 8886) AMQSR , A.. ESR
3153.    8886   FORMAT ( / / " MAXIMUM SOT, AR THERMAL OUT PUT ( KWH ) : ' , 1 PI I 0 .1 / ".
3154.                  ' MAXIM UM SOLAR ELECTRIC OUT PUT ( KWH ) : ' , 1 PE10.3)
3155.    WRITE ( 13, 3031 ) EB EM
3156.    3031   FORMAI ( '  MAXIMUM ENG INE BOILER (01' TPUT (KWH ) : ' , 1PE 10.3 )
3157.    WRITE ( 13, 302(3) EBM
3158.    3020   FORMAT ( ' MAXIMUM NONENG INE BOILER (01' TPUT (KWH ) : ' , 1PE I C . 3 )
3159.    WRITE ( 13, 3914 ) EHM
3160.    3914   FORMAT ( ' MAXIMUM HOT WATER FUE L USE (KWH ) : ' I PE 1 0.3 )
3161.    WRIT E ( 13, 8862) FHET , SHET , STHET
3162.    88 b.?   FoRMAT ( '  F(3S S IL HEA 1 PUT INTO ENG INE ( KWH ) : ' , I PE 10.3 / '.
3163.                  ' SOLAR HEAT PUT INTO L-. NGINE (KWH ) : ' , 1 PE 1 0 . 3/ %
3164.                  ' STORAGE HEAT PUT INTo I NGINE ( KWH ) : ' , 1PE 10.3 )
3165.    WRITE ( 13, 1086) EKMAX, -EKM IN
3166.    1086   FORMAT ( ' MAXIMUM ELECTRICI TY BOUGHT IN AN HOUR ( KWH ) : ' 1 PE 10. 3%
3167.                / ' MAXIMUM ELEC TRICITY SOLD IN AN HOUR (KWH) : ' , 1PE 10 .3 )
3168.    WRITE ( 13, 1020) BOLMAX
3169.    1020   FORMAT ( ' MAXIMUM FUEL BOUGHT IN AS HOUR (KWH ) : ., 1PE 10. 3 )
3170.    IF ( IGRID . EQ. 0 ) TOT S=0
3171.    WRITE ( 13, 4091 ) TO TE, TO rs, FUEL
3172.    4091   FORMAT ( ' TOTAL ELECTRICITY l\ OUGHT ( KWH ) : ' , 1PE 10. 3/%
3173.                  ' TOTAL ELECTRICITY SOLD ( KWH ) : ' , 1PE 10. 3/ %
3174.                  ' TOTAL FUEL BOUGHT (KWH ) : ' , 1PE 10. 3/// )
3175.    %****  ********************  *****  ********************  ********
317b .   IF ( IHROUT .NE .1 ) GO TO 4000
3177.    5000   WRITE ( 50 ) E, AMQSR, AMESR   ØOUT PUT FOR UT ILITY ,\ NALYS I S
3178.    X*******************   ********************   *******************
3179.    4000   RETURN
3180.    END
```

```
1.        % PROCRAM NAME: LOADS. JB
2.        % JOHN C. BELL
3.        % F. NERGY PROGRAM
4.        % OFF ICE OF TECHNOLOGY ASSESSMENT
5.        % COMP I LED
6.        %     DATE :   1/27/78
7.        %     TIME: 17:29:26
8.        % PROGRAM LOADS. JB FOR SETTING UP THE ELECTRIC, THERMAL, AND
Y.        %          PROCESS LOADS FOR:  SINGLE FAMILY, TOWNHOUSE, OR
10.                  LOW RISE APARTMENT BUILDINGS; HIGH RISE APARTMENT
Il.       %          BUILDINGS; OR, SHOPPING CENTERS
12.       %
 3.       %
 000.     SUBROUTINE LOADS(TL,TH,FAN,HEATMX,COOLMX, ISMTH, IHR)
 001.     DIMENSION ELLOAD(168),ELOAD1 (24) ,ELOAD2(24),WLOAD 1(24) , %
 002.              WLOAD2(24),HWLOAD( 168) ,E(8760),TA1 (8760)
 003.     COMMON/XDATA/E,HWLOAD
 004.     EQUIVALENCE (ELOAD1(1),ELLOAD(1 )), (ELOAD2(1),ELLOAD( 145)), %
 005.                (WLOAD1(1),HWLOAD(1)),(WLOAD2(1),HWLOAD(145))
 006 .    %
1007.     % SET UP LOADS FOR HOURLY COMPUTATION
1008.     %
1009.     READ(25) TA1,TA1
1010.     IF (ISMTH.EQ.1) GO TO 601
1011.     READ(20) E, ELOAD1, ELOAD2,WLOAD1 ,WLOAD2
1012.     KCT=0
1() 13.   DO 600 1=25,144
1014.     KCT=KCT+1
1015.     IF (KCT.EQ.25) KCT=1
1016.     HWLOAD(I)=WLOAD1 (KCT)
1017.     ELLOAD(I)=ELOAD1 (KCT)
1018.     600  CONTINUE
1019.     CO TO 701
1020.     601   READ(20) E,ELLOAD,HWLOAD
1021.     701   KCT=O @ZERO MEANS THE YEAR STARTS ON MONDAY AS THE 168 MAT. DO
1022.     TLOAD=0. 0
1023.     IF (IHR.NE.0) GO TO 602
1024 .    FANH=FAN*HEATMX
1025.     FANC=2.5*FAN*COOLMX
1026.     GO TO 702
102 7.    602   READ(12,*,PROMPT= %
1028 .      'MAXIMUM PUMP/FAN LOAD--HEATING, COOLING (KW FAN/TOTAL OUTPUT): ') %
1029.         FANH,FANC
1030.     FANHH=-FANH*HEATMX
1031.     FANCC=FANC*COOLMX
1032.     702   TL1=(459.4+TL)/1.8
1033.     TH1=0.001+(459. 4+TH) /1.8
1034.     KCT=0
1035.     RETURN
1036.     %
1037.     % SET UP LOADS FOR EACH HOUR
1 038.    %
1039.     ENTRY LOADS 1(K,EEE,QSH,TA)
10 4[I .  TA=TA1(K)
1041.     KCT=KCT+1
1 04 2 .  IF (KCT.GE. 169) KCT=1
1043.     IF (IHR.EQ.2) GO TO 444
1044.     IF ((TA.GE.TL1 ).AND.(TA.LE.TH1 )) GO TO 900
1045.     IF ((TA.LT.TL1 ).AND.(TLOAD+E (K).GT.0)) GO TO 900
1[04 6.   IF ((TA.GT.TH1 ).AND.(TLOAD+E (K).LT.0)) GO TO 900
```



```
1047.     444   TLOAD=TLOAD+E(K)
1048.     IF (IHR.NE.2) GO TO 704
1049.     KDAY=1+(KCT-1) /24
1050.     KHRD=KCT-(KDAY-1 )*24
1051.     KDAY=KDAY-7*( (KDAY-1)/7)
1052.     IF ((KDAY.LE.6).AND.((KHRD.LT.8) OR. (KHRD.GE.23)).AND. %
1053.         (TLOAD.GT.0)) TLOAD=0
1054.     IF ((KDAY.EQ.7).AND.((KHRD. LT.13 .OR.(KHRD.GT. 19)).AND. %
1055.         (TLOAD.GT.0)) TLOAD=0
1056.     IF (((K.LE.5831).AND.(K.GT. 3625)  .AND.((KHRD.LT.8) .OR.(KHRD.GE.23)) %
1057.        .AND.(TLOAD.LT.0) ) TLOAD=0
1058.     IF (ABS(TLOAD).LT.0.0001) GO TO 40
1059.     FANH=FANHH/TLOAD
1060.     FANC=FANCC/TLOAD
1061.     704   IF (TLOAD.GT.0) GO TO 20
1062.     PCLD=-TLOAD/HEATMX
1063.     IF ((PCLD-0.1).LT.0) GO TO 40
1064.     EEE=ELLOAD(KCT)+FANH*PCLD
1065.     QSH=TLOAD
1066.     TLOAD=0.0
1067.     GO TO 800
1068.     20   PCLD=TLOAD/CDOLMX
1069.     IF ((PCLD-0.1).LT.0) GO TO 40
1070.     EEE=ELLOAD(KCT)+FANC*PCLD
1071.     QSH=TLOAD
1072.     TLOAD=0.0
1073.     GO TO 800
1074.     900   TLOAD=0
1075.     40   EEE=ELLOAD(KCT)
1076.     QSH=0
1077.     800   RETURN
1078.     z
1079.     % OUTPUT STATEMENTS
1080.     %
1081.     ENTRY LOAOS2
1082.     IF (IHR.EQ.0) WRITE(13,959)
1083.     959   FORMAT( LOADS SET UP FOR SINGLE FAMILY HOUSE')
1084.     IF (IHR.EQ.1) WRITE(13,960)
1085.     960   FORMAT(' LOADS SET UP FOR HIGH RISE APARTMENT BUILDING')
1086.     IF (IHR.EQ.2) WRITE(13,970)
1087.     970   FORMAT(' LOADS SET UP FOR SHOPPING CENTER')
1088.     IF ((IHR.NE.0).AND.(FAN.GT. 0)) WRITE(13,961)
1089.     961   FORMAT('  CAUTION:   FAN LOAD (#27) IS NOT ZERO')
1090.     WRITE(13,971)
1091.     971   FORMAT(' THE MISCELLANEOUS ELECTRIC LOADS AND THE HOT WATER LOADS')
1092.     IF (ISMTH.EQ.0) WRITE(13,972)
1093.     972   FORMAT("       ARE NOT SMOOTHED')
1094.     IF (ISMTH.EQ.1) WRITE(13,973)
1095.     973   FORMAT('       ARE SMOOTHED')
1096.     RETURN
1097.     END
```

```
1.      % PROGRAM NAME: UPDATE.JB
2.      % JOHN C. BELL
3.      % ENERGY PROGRAM
4.      % OFFICE OF TECHNOLOGY ASSESSMENT
5.      % COMPILED
6.      %     DATE:  8/ 4/78
7.      %     TIME: 17:29:48
8.      % PROGRAM UPDATE.JB FOR HANDLING STORAGE INPUT/OUTPUT
9.      %
10.     %
11.     %
12.     %       S 1 ZE=ENERGY STORAGE CAPACITY
13.     %       CURRNT=AMOUNT OF ENERGY CURRENTLY IN  STORAGE
14.     %       L) ELTA=ENERGY ADDED TO STORAGE (IF POSITIVE)
15.     %       DE LTA=ENERGY REMOVED FROM STORAGE (IF NEGATIVE)
16.     %       RES ID= ENERGY WHICH CAN NOT BE STORED (IF NEGATIVE )
17.     %       RESID=ENERGY WHICH CAN NOT BE PROVIDED FROM STORAGE
18.     %               (IF  POSITIVE)
19.     %       EFFPC 1=ONE-WAY EFFICIENCY OF POWER CONDITIONER
20.     %               OR HEAT EXCHANGER
21.     %       EFFBT=TWO-WAY BATTERY OR THERMAI STORAGE EFFIC IENCY
22.     %
23.     %
24.     %
25.     %
2000.   S UBROUT INE UPDATE (S IZ E , CURRNT , DE I TA, RESI D , rFF PC 1, EF FFIT, PCS IZ 1 )
2001.   I F ( S I Z E . GT . (]. 01 ) GO I O 800
2002.   RES ID=-DELT A
,1003.  CURRNT=0 . 0
2004.   RETURN
2005.   800    RES ID=0
2006.   IF((CURRNT.GE.SIZE).AND.(DE LTA , GT .0 ) ) GO TO 700
2007.   IF ( (CURRNT.LE.0.00).AND.(DELTA, LT .0 ) ) GO TO 700
2008.   IF (ABS ( DE LTA).LT.0. 0001 ) RETURN
```

UPDATE. PB-PNC/UGF002 08/17/78 14:49:43

```
2009.   IF (DELTA. LT . 0)GO TO 100
2010.   TESTO=DELTA-PCSIZ 1 /EFFPC 1
2011.   IF(TESTO. GT. O )GO TO 50
2012.   TEST 1= EFFPC 1 *EFFBT*DELTA+CURRNT
2013.   IF ( TEST 1. GT . S IZE )GO TO 20
2014.   CURRNT =TEST 1
2015.   RETURN
2016.   20 RES ID= ( S IZ E-C URRNT -EFFPC 1*EFFBT*DELTA ) / ( EFFPC  *EFFB r )
2017.   CURRNT =S IZE
2018.   RETURN
2019.   50 TEST l= EFFBT*PCSIZ 1+CURRNT
2020.   IF ( TEST2 . GT . S1 Z E )GO TO 20
2021.   RESID= ( -1 ) *TES TO
2022.   CURRNT =TEST 2
2023.   RETURN
2024.   100 IF ( ( DELTA+PCS IZ I ) . LT .0 )GO TO 150
2025.   TEST 3=DE LTA+EFFPC 1 *CURRNT
2026.   IF (TEST 3 . LT .0 )GO TO 120
2027.   CURRNT=DE LTA/EFFPC 1 +CURRNT
2028.   RETURN
2029.   1 20 RES ID= (-1 ) *TEST3
2030.   C URRNT=0
2031.   RETURN
2012.   150 TEST4=CIJRRNT-PCS121  / EFFPC 1
2033.   IF ( TEST4 . LT . 0)GO TO 220
2034.   RES ID=- (DELTA+ PCSIZ 1 )
2035.   CURRNT=TEST4
2036.   RETURN
2037.   220    RESID=-DELTA-EFFPC 1*  CURRNT
2038.   CURRNT=0
2039.   RETURN
2040.   700    RESID=-DELTA
2041.   RETURN
2042.   END
```

COPT.PB-PNC/UGF002 08/17/78 14:48:40

```
1.          % PROGRAM NAME: COPT.JB
2.          % JOHN C. BELL
3.          % ENERGY PROGRAM
4.          % OF F ICE O F 'L EC HNOLOGY ASS ES SMENT
5.          % COMPILED
6.          %      DATE :  L21LOJ77
7.          %      TIME : 14 : 10 : 24
8.          % PROGRAM CO PT. J B FOR OFT ERM IN ING THE COP ( EFF ) FOR A
9.          %     GI VEN TEMPERATURE ( T ) FROM TH F COP CUR VE ( C P ( 2, 25 ) )
10.         %
11.         %
12.         %
13.         %
1000.       SUBROUTINE COPT (T ,CP ,EFF )
1001.       DIMENS ION CP ( 2, 25)
```

COPT . PB-PNC /UGF 00 2 08/ 17/ 78 1 4 : 48 : 40

```
1002.       IF (T. LE. C p ( 1,1 ) ) GO TO 112
1003.       DO 14 I= 1, 25
1004.       IF (CP ( 1, I ) . LT .-99. ) GO TO 113
1005.       1X=1
1006.       IF ( (T. GE . CP ( 1, I ) ) . AND. (T. LT . CP ( 1,1+1 ) ) ) GO To 111
1007.       14 CONT INUE
1008.       111 EFF=C P(2,I)+(CP(2,I+1 )-L P(2, I) ) %
1009.            * (T-CP ( 1, I ) ) / ( CP ( 1, I+1 ) -CP ( 1, I ) )
1010.       RETURN
101 i.      112 EFF=CP(2, l )
1012.       RETURN
1() 13.     113    EFF=C P ( 2, LX)
1014.       RETURN
1015.       END
```

```
1.        % PROGRAM NAME: HESYS.JB
2.        % JOHN C. BELL
3.        % ENERGY PROGRAM
4.        % OFFICE OF TECHNOLOGY ASSESSMENT
5.        % COMPILED
h.        %     DATE: 12/19/77
7.        %     TIME: 12:58:24
8.        % PROGRAM HESYS.JB FOR RUNNING HEAT ENGINE SYSTEMS WITH
Y.        %          ELECTRIC BACKUP
1D.
[1.
12.
1000.     51 UBROUT IN E SYS I EM ( K , QSH )
1001.     D IMENS IOX E ( 8760 ) , HWLOAD [ 1 68 )
1 00 2.   IM PL IC I T REAL (L )
1003.     C OMMON /AXXX/COPA , EHWEFF , HCO PM , CCOPM , EFFB , ENGMAX , EF F 1, EF F2 , ALPHA 1, %
1 0(14.                ALPHA2 , HTQSTM , LTHTS , HTHTS , I TQSTM , I TLTS , HT LTS , HLH I H , %
1005 .                 FHWEFF , HLLTH , EFFBE , ES TORM , t FFBAT , PC S IZ, EFF PC , HEA TMX , %
1006 .                 COOLMX , FAN , TL , 1 H , XXX, NHTQ , NI TQ , ICR J 1), ISO LAR , IA, I SMTH , %
1 00 ? .               I HR , IOFFPK
1008.     COMMON /L XIX / CO PAA , CO [Jr E , F BM, EBEM , 1" EE , EF FEX , TE NGM , B F NGM , ENGM , %
1009.                  ESR , ES TOR , EF FF , FF HK , FH E1 , FUEL , H TSSTM , HTQ , HTQI , H TQO , %
1010.                  HTQSO ,HTQSTO, LTQ1,LTQO, LTQSO, L1GSTO, QA,QC,QC 1, QC 2, %
1011.                  QC2 / , 0E.QP.QS,QSR.RES I D9 , SHHT,STH tT,TO TTEO , TOTBEO , %
1012.                  TO TEO , HL HTL , HLLTL , EF FI (1T , E FFST , I PRINT
1013.     COMMON XDAT A / E , HWI O AD
1014.     DA I A I PR [ N1, 2/
2000.     QC I =0
2001.     QC2=0
2002.     1QC2=1
2003.     QHOUR= OF I
2004.     I F (U) P AA. ' r. 0. 001 ) GO TO 32
2005 .    QHOUR= (; P+QC / COPAA
2006 .    32    C ALL U PDATE ( L TQSTM , LTQSTO , -QHOUR, RESIDQ, EFFEX ,EFFLOT, LTQSTM)
2007 .    QP I =AMAX 1 ( 0, QP- ((j HOUR-RE S T DQ ) )
2008.     IF ( QP 1 .Lh. 0.001 ) QC=QC-COPAA* (QHOUR-RES IDQ-QP )
2009 .    QP=QP 1
20 I 0,   I F ( QSH . GT . 0 ) QC2Z=QSH-QC
20 11 .   IF ( QSH . LE .0 ) QC2Z=-QSH-QC
2012 .    %* *** ******* ************* ************ ********** *********** * *
2013.     >*********************   ************************   ************
2014.     %**** * HEAT ENG INE SECT ION--VERY COMPL ICATE D ! ! !
2015.     %* *** ************** ************** **. ******** ** .**************
201 b .   %  **** ********* ********** .******** ********* ********* ********* *
2017 .    SOL E=QSR+H TQSTO
2018 .    H TQSTO=0
2019.     IF ( SOL ! . GT . QP ) GO TO 2 000
2020.     ' ! .2N?    QP=QP-SOL E
2021 .    SOL E=0
' ! [122 .  QC 1 =QC
2023.     IF (QSH . GT .0 ) QC2=QSH-QC
2024.     I F (QSH . LE .0 ) QC2=-QSH-QC
2 025 .   E{) UT=0
2026.     IQC 2=0
2027.     EEE=EEE+QP/EHWEFF
2028.     QP=0
2029.     GO TO 900
2030.     2000    IF (COPAA. GT .0.01 ) GO T(3 2100
2031.     QC 1 =QC
20 32.    CO PAA= 1.0
```



```
2033.     %*****************************************************************
2034.     z***** C.&~ THE BOTTOM ING CYCLE BE ON ALL I H r WAY
2035.     Z****  *************************  *****  *************************
203b .    220 1    IF (QP . GT . SOLE*EFF I *ALPHA.! ) GO To 2001
2037.     BETAV= 1
2038.     GAMMA= 1
2039.     GO TO 2050
2040.     Z*******************   *********************   ******************
2041.     %***** CAN THF BOTTOMING CYCLE BE ON FART WAY?
2042.     Z*****************  ******************  ********************  **
2043.     200 I    IF ( QP. GT. SOLE* EFF I * (ALPHA 1+ALPHA 2 ) ) GO TO 2 002
2044.     BETAV=1
2045.     GAMMA= ( SOLE *EFF 1* ( ALPHA1+ALPHA2 ) -QP ) / ( SO LE*EFF I *ALPHA 1 )
2046.     GO TO 2050
2047.     Z****  *************************  *****  *************************
2048.     %***** BOTTOMING CYCLE OFF !
2049.     %*  ******* ********* ********* .********  **********  *********  *
2050.     2002    BETAV= ( SO LE-QP ) / ( SOLE* ( 1-EFF I * (ALPHA I +ALPHA2 ) ) )
2051.     GAMMA=0
2052.     %****  *************************  *****  *************************
2053.     %***** CHECK FOR ENGINE CLIPP ING
2054.     Z****  ************************* *****  ************************  **
2055.     2050    IF ( BETAV*SOLE*EFF1 .GT . ENGMAX) GO To 2090
2056.     %****  *************************  *****  *************************
2057.     z***** COMPUTE ELECTRIC AND LT THERMAL OUPUTS
2058.     %****  *************************  *****  *************************
2059.     2051    EOUT=BETAV*SOLE *EFF 1* ( 1+GAMMA*EFF2*ALPHA 1 )
2060.     z****  *************************  *****  *************************
2061.     %***** CHECK IF ALL ELECTRICITY CAN BE USED
2062.     %*** ********* **** * *** ********** **********.*** *********** ** **
2063.     XLAX=AMIN 1 ( PC SIZ/EFFPC , ( ESTORM-ESTOR ) / EEFF )
2064.     IF (EOUT. GT. EEE+QC1 /COPE E+XLAX) GO TO 2095
2065.     %*** **A'**** *** * ***** ******* .**** **** ***** **********.*********
2066.     %***** CYCLE AND Go To NEXT HOUR
2067.     %**** ***** ******** ************ **** **** *** *** *** ** **** ********
2068.     GO TO 900
2069.     %*** **** *** *** ***** ******* * *** *** *************** *** ****** ****
2070.     z***** FIX ENGINE cLIPPING CONDITION--HAVE TO CHECK
2071.     %***** WHETHER REVISION AFFECTS MEETING THE THERMAL LOAD
2072.     z***   ***   ***   ***   *.**   ***   ~ ***** ******** ****A*** ● *** ***********  ****
2073,     2090    IF (QP. GT. ALPHA2*ENGMAX) GO TO 2091
2074.     BETAV= 1
207S .    GAMMA= 1
2076.     GO TO 2058
2077.     2091    IF (QP. GT. ENGMAX*(ALPHA 1+ALPHA2) ) GO TO 2094
2078.     BETAV= 1
2079.     GAMMA= ( EN GMAX* (ALPHA 1+ALPHA2 ) -QP) / (ALPHA 1 *F NGMAX)
2080.     GO TO 2058
2081.     2094    GAMMA=0
2082.     BE TAV=ENGMAX/ ( ENGMAX* ( 1-EFF 1 * (ALPHA 1+ALPHA2 ) ) +EFF I *Qp )
2083.     2058    CALL UPDATE (HTQSTM, HTQSTO, SOLE-ENGMAX/(EFF 1* BETAV), %
2084.             RES IDQ , EFFEX, EFFST , HTQSTM)
2085.     CALL UPDATE (LTQSTM, LTQSTO, -RESIDQ, RESID, EFFEX, EFFLOT, LTQSTM)
2086.     RESID9=RES ID9-RESID
2087.     SOL E=ENGMAX/ (EFF 1 *BETAV )
2088.     GO TO 2051
2089.     %*****************************************************************
2090.     %***** FIx overproduction OF ELECTRICITY IF HI ENERGY
2091.     %***** CAN BE STORED; IF HT STORAGE FULL, GO BACK AND
2092.     %***** SELL THE AVAILABLE EL ECTRICITY TO THF GRID
```

```
HE SY S. PB-PNC/UGF002 08/17/78 14:43:37

2093.     %* * * * * * * * * * * * * * * * * * * * * * * * * * * * * * * * * * * * * * * * * * * * * * * * * * * * * * * * * * * * * * * * * * * *
2094.     2095   IF (HTQSTO.GE.HTQSTM*0.99) GO TO 900
2095.     EOUT=EEE+QC/COPEE+XLAX
2096.     IF (QP.GT.ALPHA2*EOUT/(1+ALPHA1*EFF2)) GO TO 2098
2097.     GAMMA= 1
2098.     BETAV= 1
2099.     GO TO 2113
2100.     2098   I F ( QP . GT . ( ALPHA I +AL PHA2  *EOUT ) GO TO 2099
2101.     L, AMMA= ( EOUT* ( ALPHA I +AL PHA2 ) -QP )   (ALPHA 1 * (EOUT+E FF2*QP )
2102.     BETAV= 1
2103.     GO TO 2 11 3
2104.     2 099   GAMMA=0
2105.     BE LA\' =EOUT / ( EFF 1 *QP+EOUT* ( 1 -EFF 1 * ( ALPHA 1+ALPHA2 ) ) )
2106.     2113   C ALL 1 PDAT I ( HTQSTM, HTOSTO, SO LE. -EOUT/ %
2107.            ( BE TAV*EFF 1 * ( 1 +GAMMA*ALPHA 1 *EFF2 ) ) ,R ES IDQ , EFFEX, EFFST , HTQSTM)
2108.     SOLE=EO " T / ( BET AV*E F F 1 * ( 1 K; M?' A* LPHA 1 *EF F.? ) ) -RES IDQ
2109.     I F (R} S IDQ . LT. 0 ) GO TO 2201
2110.     GO TO 900
2111.     %* ****** ********* ********* ***** ********* ************** *******
2112.     %***** CHEC K WHETH ER THE Th ERMAL S PACE COND I r LOX ING
2 13.      ,** ** * ROUTE I j THE MOST EF F IC I ENT
  14.      ************************ ************************ **************
· 15.      .1100   IF (CO PAA. LT . EFF I * ( COPE E+ (ALPHA 1+ALPHA2 ) *COPAA) ) GO TO 2101
· 16.      I F (SOLE. LT . QP+QC / CO PAA ) GO TO 2 Y [) 1
  17.      QP=QP+QC /Lo PAA
· 18.      QC 1 =0
  15.      QC2=QC
  20.      T QC 2=0
2121.      QC=0
2122.      GO TO 2 20 1
2123.      2901   SOLE =SOLE-QP
2124.      QP=0
2125.      (/C=, QC-SOLE *COPAA
2126.      so I r.o
2127.      GO TO 2 202
2128.      ·**** ********************  ************************  ************
2129.      %** *** CHI ["K WHET} I ER THE BOT TOMI NG CYCLE IS MORE E FF IL IENT
2130.      % ***** THAN THE TH ERMAL ROUTE--I F THE BOTTOM ING CYCLE L S
2131.      ' ***** MOR E EFFIC I EN r-- I . E .  EFF2*CO PEE >CO PAA>0--GO TO
2132.      ; ***** s TATEMENT 2501 ; OTHERWI S E STAY HERE .
2133.      ' *** * * ( SOTE : I T L\ AS SU MED I N THESE SW I TCHES
2134.      ,*** * * THAT E FF2 <EFF 1 )
2135.      %** *** ** **** ************** ****** ************** ******* ********
2136.      2101   IF ( CO PAA. LT . EFF2*CO Pr E 1 GO TO 2501
2137.      QC 1=0   . QC 1 IS s PACECOND I T IONINGLOADMETHLECTRICALLY
2138.      (< C2=QC:QC2 IS S PAC E COND IT ION 1 NG LO An MET THERMALLY
2139.      I F ( (J P+QC /COPAA . GT . SOLE* EF F 1 *ALPHA? ) GO TO 2402
2140.      BETAV= 1
2141.      GAMMA= 1
2142.      GO TO 2450
2143.      24 {02   IF ( Q P+QC / CO PAA . GT . SOLE *F F F 1 * ( ALPHA 1 +ALPHA2) ) GO TO 2 40 3
2144.      BETAV= 1
2145.      GA CL\= ( SO LE*EFF 1 * (ALPHA I +ALPHA 2 ) -Q P-QC /COPAA ) / ( SOLE *1 FF 1 * ALPHA I )
2146.      GO TO 24 50
2147.      2403   I F ( QP . GT. SO I F* EFF I * ( ALPHA I +AL PHA2 ) ) GO : O 2 404
2148.      BET A L'= 1
2149.      GA IMA=0
2150.      QC I =(< C-COPAA* ( SOLE *t F F I * ( AL PHA 1 +AI PHA2 ) -QP )
2151.      QC 2 =QC-QC I
2152.      GO TO 2450

HESYS. PB-PNC/UGF002 08/1 7/78 14: 43: 37

2153.      2404   GAMMA=0
2154.      BETAV= (SOLE-QP) / ( SOLE* ( l-EFF l * (ALPHA l+ALPHA2  ))
2155.      QC2=0
2156.      QC1=QC
2151.      2450   IF (BETAV*SOLE*EFF 1. GT . ENGMAX) GO TO  405
2158.      2451   EOUT=BETAV*SOLE* EFF 1 * ( l+GAMMA*ALPHA l*EFF2 )
2159.      XLAX=AMIN1 (PCS IZ/EFFPC, ( ESTORM-ESTOR ) /EEFF)
2160.      IF ( EOUT . GT . EEE+XLAX+QC l /COPEE ) GO TO 2410
2161.      GO TO 900
2162.      ~****  ********************k******  *****  ************************
2163.      %***** FIX ENGINE CLIPP ING CONDITION--HAVE ro CHECK
2164.      %***** WHETHER REVISION AFFECTS MEETING THE THERMAL LOAD
2165.      ~****  **************&***********  •****************************
2166.      2405   IF ( EliGELAX. LT . EEE+(QC-AMAXl ( (ALPHA l+ALPHA2 ) *ENGMAX-QP ,0 ) %
2167.                *co PAA) /COPEE ) GO TO 2705
2168.      QC 1=0
2169.      QC2=QC
2170.      IF (QP+QC/COPAA. GT .ALPHA2*ENGMAX) GO TO 2406
2171.      BETAV= 1
2172 .     GAMMA=l
2173.      GO TO 2458
2174.      2406   IF (QP+QC/COPAA. GT . ENGMAX* (ALPHA l+ALPHA2 ) ) GO TO 240 7
2175.      BETAV= 1
2176.      GAMMA= (ENGMAX* (ALPHA l+ALPHA2 ) -QP-QC /COPAA) / (ALPHA1 *ENGMAX)
2177.      GO TO 2458
2 178.     2407   IF (QP. GT. ENGMAX* (ALPHA l+ALPHA2 ) ) CO TO 2408
2179.      BETAV= l
2180.      GAMMA=0
2181.      QC 1=QC-COPAA* ( ENGMAX*(ALPHA l+ALPHA2 ) -QP)
2182.      QC2=QC-QC 1
2183.      GO TO 2458
2184.      2408   GAMMA=0
2185.      BETAV=ENGMAX/ (ENGMAX* ( 1 -EFF1* (ALPHA l+ALPHA2 ) )  EFF1 *QP )
2186.      QC2=0
2187.      QC 1=QC
2188.      2458   CALL UPDATE (HTQSTM , HTQSTO , SOLE-ENGMAX/ BETAV*EFF ) , %
2189.                          RESIDQ, EFFEX, EFFST , HTQSTM )
2190.      CALL UPDATE (LTQSTM, LTQSTO , -RESIDQ, RESID, EFFEX, EFFLOT, LTQSTM)
2191.      RESID9=RESID9-RESID
2192.      SOLE= ENGMAX/ (BETA V*EFF1 )
2193.      GO TO 2451
2 19&.     Z****  ************************  *****  ************************
2195.      %***** FIX OVERPRODUCTION OF ELECTRICITY IF HT ENERGY
2196.      %*****  CAN BE STORED ; IF HT STORAGE FUL L, GO BACK AND
2197.      z***** SELL THE AVAILABLE ELECTR IC ITY TO THE GRID
2198.      Z****  ***************************  *****  ************************
2199.      2410   IF (HTQSTO. GE. HTQSTM*0 . 99) GO TO 900
2200.      QC 1=0
2201.      QC2=QC
2202.      EOUT=EEE+XLAX
2203.      IF (QP+QC/COPAA. GT . ALPHA2*EOUT / ( l+ ALPHA1*EFF 2) ) GO TO 2416
2204.      BETAV= 1
2205.      GAMMA= 1
2206.      GO TO 2468
2207 .     2416   IF (QP+QC /COPAA. GT . EOUT* (ALPHA l+ALPHA2 ) ) GO TO 2417
2208.      BETAV= 1
2209.      GAMMA= ( EOUT* (ALPHA l +ALPHA2 ) -QP-QC /COPAA ) / (ALPHA 1 * %
2210.             (EOUT+EFF2* (QP+QC/COPAA) ) )
2211.      2417   EOUT=EEE+XLAX+Q C/COPEE
2212.      IF ( QP. GT. EOUT* (ALPHA l +ALPHA2 ) ) GO To 2418
```

```
      BETAV= 1
      GAMMA=0
      EOUT=(COPEE*(EEE+XLAX )@ C+QP*COPAA)/%
                                 (COPEE+COPAA*(ALPHA 1 +ALPHA2 ) )
      QC 1=QC-COPAA*(EOUT*(ALPHA1+ALPHA2)-QP)
      QC2=QC-QC1
      GO TO 2468
2418  GAMMA=0
      BETA V= EOUT/ ( EOUT*(1 -EFF 1 * (ALPHA 1 +ALPHA2 ) ) +EFF1 *QP )
      QC2=0
      QC 1 =QC
2468  CALL UPDATE(HTQSTM,HTQSTO, SOLE-EOUT/ %
            (BETAV*EFF1*( 1+GAMMA*ALPHA1*EFF2 )),RESIDQ,EFFEX,EFFST,HTQSTM)
      SOLE=EOUT/(BETAV*EFF1*(1+GAMMA*ALPHA1*EFF2))-RESIDQ
      IF (RESIDQ.LT.0) CO TO 2101
      GO TO 900
      %*****************************************************************
      %*****************************************************************
      %***** REACH THIS SECTION WNEN EFF2*COPEE>COPAA>0
      %*****************************************************************
      %*****************************************************************
2501  QC1=0
      QC2=QC
      IF (QP+QC/COPAA.GT.SOLE*EFF1*ALPHA2 ) GOTO 2502
      BETAV=1
      GAMMA=1
      GO To 2550
2502  IF (QP.GT.SOLE*EFF1*ALPHA2 ) GO TO 2503
      BETAV=1
      GAMMA=1
      QC1=QC-COPAA*(SOLE*EFF1*ALPHA2-QP)
      QC2=QC-QC1
      GO TO 2550
2503  IF (QP.GT.SOLE*EFF1*(ALPHA1+ALPHA2 )) GO To 2504
      BETAV=1
      GAMMA= (SOLE*EFF1*(ALPHA1+ALPHA2)-QP)/(SOLE*EFF1*ALPHA1)
      QC1=QC
      QC2=0
      GO TO 2550
2504  GAMMA=0
      BETAV=(SOLE-QP)/ (SOLE* (1-EFF1*(ALPHA1+ALPHA2) ))
      QC1=QC
      QC2=0
2550  IF (BETAV*SOLE*EFF1.GT.ENGMAX) GO TO 2590
2551  EOUT=BETAV*EFF1*SOLE*(1+GAMMA*ALPHA1*EFF2)
      XLAX=AMIN1(PCSIZ/EFFPC,(ESTORM-ESTOR)/EEFF)
      IF (EOUT.GT.EEE+XLAX+QC1/COPEE ) GO TO 2595
      Go TO 900
      %*****************************************************************
      %***** FIX ENGINE CLIPPING CONDITION--HAVE TO CHECK
      %***** WHETHER REVISION AFFECTS MEETING THE THERMAL LOAD
      %*****************************************************************
2590  IF (ENGMAX.LT.EEE+(QC-AMAX1((ALPHA1+ALPHA2)*ENGMAX-QP, 0) %
            *COPAA)/COPEE) GO TO 2705
      QC1=0
      QC2=QC
      IF (QP+QC/COPAA.GT.ALPHA2*ENGMAX) GO TO 2591
      BETAV=1
      GAMMA=1
      GO TO 2558
```



```
2591  IF (QP.GT.ALPHA2*ENGMAX) GO TO 2592
      BETAV=1
      GAMMA-1
      QC1=QC-COPAA*(ALPHA2*ENGMAX-QP)
      QC2=QC-QC1
      GO TO 2558
2592  IF (QP.GT. ENGMAX*(ALPHA1+ALPHA2) ) GO TO 2593
      BETAV=1
      GAMMA=(ENGMAX*(ALPHA1+ALPHA2 )-QP)/(ALPHA1*ENGMAX)
      QC1=QC
      QC2=0
      GO TO 2558
2593  GAMMA=0
      BETAV=ENGMAX/(ENGMAX*(1-EFF1*(ALPHA1+ALPHA2 ))+EFF1*QP)
      QC1=QC
      QC2=0
2558  CALL UPDATE (HTQSTM,HTQSTO,SOLE-ENGMAX/(BETAV*EFF1 ), %
                  RESIDQ,EFFEX,EFFST,HTQSTM)
      CALL UPDATE(LTQSTM,LTQSTO, -RESIDQ,RESID,EFFEX,EFFLOT, LTQSTM)
      RESID9=RESID9-RESID
      SOLE-ENGMAX/ (BETAV*EFF1 )
      GO TO 2551
      %*****************************************************************
      z***** FIXOVERPRODUCTION OF ELECTRICITY IF HT ENERGY
      %***** CAN BE STORED; IF HT STORAGE FULL, GO BACK AND
      %***** SELL THE AVAILABLE ELECTRICITY TO THE GRID
      %*****************************************************************
2595  IF (HTQSTO.GE.HTQSTM*0.99 ) Go To 900
      EOUT=EEE+XLAX
      QC1=0
      QC2=QC
      IF (QP+QC/COPAA.GT.ALPHA2*EOUT/ (1+ALPHA1*EFF2)) GO TO 2596
      BETAV=1
      GAMMA=1
      GO TO 2600
2596  EOUT=EEE+XLAX+QC/COPEE
      IF (QP.GT.ALPHA2*EOUT/(1+ALPHA1*EFF2) ) GO To 2597
      BETAV=1
      GAMMA=1
      EOUT=(COPEE*(EEE+XLAX)+QC+QP*COPAA) / %
            (COPEE+(COPAA*ALPHA2)/(1+ALPHA1*EFF2 ))
      QC1=QC-COPAA*(ALPHA2*EOUT/ (1+ALPHA1*EFF2)-QP)
      QC2=QC-QC1
      GO TO 2600
2597  IF (QP.GT.EOUT* (ALPHA1+ALPHA2) ) GO TO 2598
      BETAV=1
      GAMMA=(EOUT*(ALPHA1+ALPHA2)-QP)/(ALPHA1*(EOUT+EFF2*QP) )
      QC1=QC
      QC2=0
      GO TO 2600
2598  GAMMA-0
      BETAV=EOUT/(EOUT*(1-EFF1*(ALPHA1+ALPHA2))+EFF1*QP)
      QC1=QC
      QC2=0
2600  CALL UPDATE(HTQSTM,HTQSTO, SOLE-EOUT/ %
            (BETAV*EFF1*(1+GAMMA*ALPHA1*EFF2)),RESIDQ,EFFEX,EFFST,HTQSTM)
      SOLE=EOUT/(BETAV*EFF1*  (1+GAMMA*ALPHA1*EFF2 ))-RESIDQ
      IF (RESIDQ.LT.0) GO TO 2501
      GO TO 900
      %*****************************************************************
```

```
HESYS . PB-PNC/UCb'002 08/ I 7 / 78 I 4 : 4 3 : 37

2333.      %**•·* USE THERMAL ENERGY TO MEET SPACE CON D I I ION ING
2334.      %***** LOAD---THI s I s NOT TH ), MOST F F  F IC IENT ROUTE BUT MUS T
2335.      z***** BE I; SE, D AS l_ PIG INE S I ZE PREVE X I S THI(J PTIMAL ROUTE FROM
2336.      Z**** * BE I NG TAKEN !
2337.      X*****************  ******************  *******************  *******
2338.      2705    GAMMA=0
2339 .     QC 1 =AMAXI ( EN GMAX-EE E , 0 ) *COP EE
2 340.     QC 2= QC-QC 1
2341.      SOLEU=ENGMAX* ( 1 / EFF 1- (ALPHA 1 +ALPHA 2 ) ) +QP+QC 2 /{. OPAA
234 2.     I F ( SOLEU . GE . SOLE ) GO TO 2710
2343.      BETAV=ENGMAX/ ( EFF 1* SOLEU )
2344.      CALL UPDATE (HTQSTM , HTQSTO , SOLE-SOLEU , RES IDQ, EFFEX , EFFST , HTOS TM )
2345.      CALL U PDATE ( LTQSTM , LTQSTO , -RFS I DQ , RES I D , EFF EX , EFFLOT , LTQSTM )
2346 .     RESID9=RES ID9-RES ID
2347.      SOLE=SOLEU
2348.      GO TO 2551
2349.      2710    BETAV=ENGMAX/ ( SOL E*EFF 1 )
2350.      QC2= ( ( I -B ETAV) *SO LE-QP+ (AL PHA 1+ALPHA2 ) *ENGMAX ) *COPAA
2351.      QC 1= QC-QC2
.2352.     GO TO 2551
2353.      .:  ******  **********  **********  ************  **********  **********  ****
2354.      %   FI SD MAXIMUM ENG INE CON D II ION S AND ST ORAGE MAXIMUM S
2355.      Z*********************   ************************   ****************
2356.      900    QOUT=SOLE* ( ( 1 -B ETAV ) +B E TAV*EF F 1 * (ALPHA2+ALPHA 1 * ( 1 -GAMMA ) ) )
2357.      CALL UPDATE ( ESTORM , ESTOR , EOUT-EEE-QC 1 /CO PEE , RES I DE , EFF PC , %
```

```
HESYS . PB-PNC /UGF00 2 08/ 17/78 1 4 : 4 3 : 37

2358.                                EFFBAT , PCS I/! )
2359.      IF (COPAA. LT .0.1 ) COPAA= 1.0
2360.      CALL UPDATE ( LTQSTM, LTQSTO , QOUT-QP-IQC 2*(0(" 2/co PAA , RES IDQ , EF FE>: , %
2361 .                                EFFLOT , LTQSTM )
2362.      RES ID9=RE S ID9-RES I DQ
2363.      E (K) =RES IDE
2364.      EY=GAMMA*ALPHA 1•EF F2
2365.      EZ=EOUT/ ( EFF l * ( 1+EY ) )
2366.      TENGM=AMAX 1 (TENGM, EZ*EFF l )
2367.      BENGM=AMAX 1 (BENGM , EY*EZ*EFF 1 )
2368.      ENGM=AMAXI ( ENGM , EOUT )
2369.      TOTTEO=TOTTEO+EZ *EFF 1
2370.      TOTB EO=TOTBEO+EY*EZ* EFF 1
2371.      TOTEO=TOTEO+EOUT
2372.      HTQ=HTQSTO-HTQSO
2373.      SHE=AMIN 1 (EZ , QSR )
2374.      HTQ9=0
2375.      IF (HTQ. LT. 0 ) l{ TQ9=-HTQ
2376 .     STHE=AMIN 1 (EZ-SHE ,HTQ9 )
237 7.     FHET=O
2378.      SHET=SHET+SHE
2379.      STHET=STHET+STHE
2380.      6813    CONTINUE
2381.      RETURN
2382.      END
```

```
HFSYS.PB-PNC/UGF002 08/17/78 14:42:52

1.        % PROGRAM NAME: HFSYS.JB
2.        % JOHN C. BELL
3.        % ENERGY PROGRAM
4.        % OFFICE OF TECHNOLOGY ASSESSMENT
5.        % COMPILED
6.        %     DATE: 12/19/77
7.        %     TIME: 12:58:45
8.        % PROGRAM HFSYS.JB FOR RUNNING HEAT ENGINE SYSTEMS WITH
9.        %          FOSSIL FUEL BACKUP
10.
11.
12.
1000.     SUBROUTINE SYSTEM(K,QSH)
1001.     DIMENSION E(8760),HWLOAD(168)
1002.     IMPLICIT REAL(L)
1003.     COMMON/AXXX/COPA,EHWEFF,HCOPM,CCOPM,EFFB,ENGMAX,EFF1,EFF2,ALPHA1,%
1004.                 ALPHA2,HTQSTM,LTHTS,HTHTS,LTQSTM,LTLTS,HTLTS,HLHTH,%
1005.                 FHWEFF,HLLTH,EFFBE,ESTORM,EFFBAT,PCS1Z,EFFPC,HEATMX,%
1006.                 COOLMX,FAN,TL,TH,XXX,NHTQ,NLTQ,IGRID,ISOLAR,IA,ISMTH, %
1007.                 IHR,IOFFPK
1008.     COMMON/CXXX/COPAA,COPEF,EBM,EBEM,EEE,EFFEX,TENGM,BENGM,ENGM, %
1009.                 ESR,ESTOR,EEFF,FFHW,FHFT,FUEL,HTSSTM,HTQ,HTQ1,HTQO, %
1010.                 HTQSO,HTQSTO,LTQ1,LTQO,LTQSO,LTQSTO,QA,QC,QC1,QC2, %
1011.                 QC2Z,QE,QP,QS,QSR,RESID9,SHFT,STHFT,TOTTEO,TOTBEO, %
1012.                 TOTEO,HLHTH,HLLTL,EFFLOT,EFFST,IPRINT
1013.     COMMON/XDATA/E,HWLOAD
1014.     DATA IPRINT/2/
2000.     QC1=0
2001.     QC2=0
2002.     IQC1=1
2003.     QHOUR=QP
2004.     IF (COPAA.LE.0.001) GO TO 32
2005.     QHOUR=QP+QC/COPAA
2006.     32   CALL UPDATE(LTQSTM,LTQSTO -QHOUR,RESIDQ,EFFEX,EFFLOT,LTQSTM)
2007.     QP1=AMAX1(0,QP-(QHOUR-RESIDQ))
2008.     IF (QP1.LE.0.001) QC=QC-COPAA* QHOUR-RESIDQ-QP)
2009.     QP=QP1
2010.     IF (QSH.GT.0) QC2Z=QSH-QC
2011.     IF (QSH.LE.0) QC2Z=-QSH-QC
2012.      ***********************************************************
2013.      ***********************************************************
2014.      **** * HEAT ENGINE SECTION--VERY COMPLICATED!!!
2015.      *********************  ***********************  **********
2016.     % **** ********** ***************** ********** ****** ********** •**
2017.     'S OLE=QS R+H TQSTO
2018.     H, QST0=0
2019.     IF (COPAA.', 1. 0.0 1) GO TO 9829
2020.     LEE=EFE+QC/LOPEE
2021.     QC1=QC
2022.     QC2=0
2023.     IQC1=0
2024.     QC=0
2025.     COP 1/- 1. 0
2026.     9829   XLAX=AMIN1 (PCS IZ/EFFPC, (E STORM-ES TOR ) /EEFF )
2027.     XOUT=AMIN 1 (PCS IZ/EFFPC , ESTOR*EFFPC )
2028.     EK=AMIN 1 (EEE/ ( EFF 1 * ( 1+ALPHA 1 *EFF2 ) ) , QP+QC/COPAA)
2029.     IF ( SOLE. CT . EK) GO TO 2197
2030.     F ( K ) = ( EK-SOL E ) / EFFB
2031.     SOLE=E K
2032.      197   IF( ["OPEL. L1 .0.01 ) GO To 21 99
```

```
HF SYS . PB-PNC /UGF002 08/17/ 78 14 : 42 : 5 2

2033.     Z****  ***************************  *****  ************************
2034.     "g***** CHECK WHETHER THE THERMAL SPAC E CON U I r ION I NG
2035.     %**** * ROUT E I S THE MOS T EFF IC IENT
2036.     Y*********************   ************************   ****************
2037.     I F ( COPAA . L r . FFF 1 * ( COPEE+ ( ALPHA 1+ALPHA 2 ) *COPAA ) ) GO TO 2401
2038.     2199   QHOUR=QP+QC /COPAA
2039.     QC1=0
2040.     QC2=QC
2041.     I F ( QHOUR . GT . ALPHA2*EFF 1 *SOLE ) GO To 2 I () 1
2042.     BETAV= 1
2043.     GAMMA= 1
2044.     GO TO 2109
2045.     2101   I F ( QHOUR . GT . SOLE*EFF 1 * (ALPHA 1 +ALPHA 2 ) ) GO TO 2102
2046.     BETAV= 1
?047 .    GAMMA= ( SOT. E*EFF 1* (ALPHA 1+ALPHA2 ) -QHOUR) / ( SOLE*EFF 1 *ALPHA 1 )
2048.     GO TO 2109
2049.     2102   GAMMA=0
2050.     BETAV= ( SOLE-QHOUR ) / ( SOLE* ( 1 -EFF 1 * (ALPHA 1+ALPHA2 ) ) )
2051.     2109   IF (BETAV*SOLE*EFF 1. GT. ENGMAX ) GO TO 7090
2052.     9109   EOUT=BETAV*SOLE *EFF 1• ( 1 +GAMMA*ALPHA I *EFF2 )
2053.     IF ( EOUT . GT . EEE+XLAX ) GO TO 21 20
2054 .    IF ( EOUT . LT . EEE-XOUT ) GO TO 2130
2055.     GO TO 900
2056.     Z****  ***************************  *****  ************************
2057.     %***** FIX ENGINE CLIPP ING CONDITION--HAVE TO CHECK
2058.     %***** WHETHER REVIS ION AFFECTS MEETING THE THERMAL LOAD
2059.     Z****  ***************************  *****  ************************
2060.     7090   IF (QHOUR. GT . ALPHA 2* ENGMAX) GO TO 5091
2061.     BETAV= 1
2062.     GAMMA= 1
2063.     GO TO 7058
2064.     5091   IF ( QHOUR. GT. ENGMAX* (ALPHA 1+ALPHA2 ) ) Go TO 7094
2065.     BETAV=1
2066.     GAMMA= (ENGMAX* (ALPHA 1+ALPHA2 ) -QHOUR) / (ALPHA 1* ENGMAX)
2067.     GO TO 7058
2068.     7094   GAMMA=0
2069.     BETAV=ENGMAX/ ( ENGMAX* ( 1 -EFF1 * (ALPHA 1+ALPHA2 ) )+EFF 1 *QHOUR )
2070.     7058   CALL UPDATE ( HTSSTM, HTSSTO , SOLE-ENGMAX/ ( EFF 1 *BETAV) , %
2071.            RESIDQ , EFFEX, EFFST , HTSSTM)
2072.     SO LE=ENGMAX/ (EFF1*BETAV)
2073.     GO TO 9109
207& .    Z****  ***************************  *****  ************************
2075.     %***** FIX overproduction OF Electricity
2076.     Z****  ***************************  *****  ************************
2077.     2120   EOUT=EEE+XLAX
2078.     IF ( QHOUR . GT . ALPHA2*EOUT / ( 1+ALPHA 1 *EFF2 ) ) GO TO 2121
2079.     BETAV=1
2080.     GAMMA= 1
2081.     GO TO 2129
2082.     2121   IF ( QHOUR. GT. EOUT*(ALPHA 1 +ALPHA2 ) ) GO TO 2 1 22
2083.     BETAV= 1
2084.     GAMMA= (EOUT* (ALPHA 1+ALPHA2 )-QHOUR) / (ALPHA1* ( EOUT+EFF2*QHOUR ) )
2085.     GO TO 2129
2086.     2122   GAMMA=0
2087.     BETAV=EOUT/ (EOUT* ( 1-EFF 1 * (ALPHA 1+ALPHA2 ) )+EFF 1 *QHOUR )
2088.     2129   CALL UPDATE (HTQSTM, HTQSTO, SOLE-EOUT/ %
2089.            (BETAV*EFF1 *( 1+GAMMA*ALPHA1 *EFF2 ) ) , RES IDQ, EFFEX, rFFsT, HTQSTM )
2090.     CALL UPDATE (LTQSTM, LTQSTO, -RFS IDQ, RFs Id, EFFEX, EFFLOT, LTQS TM )
2091.     RESID9=RES ID9-RES ID
2092.     GO TO 900
```

```
HFSYS.PB-PNC/UGF002 08/17/78 14:42:52

2093.   %*************************************************************
2094.   %***** FIX UNDERPRODUCTION OF Electricity--E-D BACKUP!
2095.   %*************************************************************
2096.   2130   EOUT=EEE-XOUT
2097.   IF (QHOUR.GT.ALPHA2*EOUT/(1+ALPHA1*EFF2)) GO TO 2131
2098.   BETAV=1
2099.   GAMMA=1
2100.   GO TO 2139
2101.   2131   IF (QHOUR.GT.EOUT*(ALPHA1+ALPHA2)) GO TO 2132
2102.   BETAV=1
2103.   GAMMA=(EOUT*(ALPHA1+ALPHA2)-QHOUR)/(ALPHA1*(EOUT+EFF2*QHOUR))
2104.   GO T(.) 2139
2105.   2132   GAMMA=0
2106.   BETAV=EOUT/(EOUT*(1-EFF1*(ALPHA1+ALPHA2))+EFF1*QHOUR)
2107.   2139   CALL UPDATE(HTSSTM,HTSSTO,SOLE-EOUT/Z
2108.          (BETAV*EFF1*(1+GAMMA*ALPHA1*EFF2)),RESIDQ,EFFEX,EFFST,HTSSTM)
2109.   E(K)=E(K)+RESIDQ/EFFB
2110.   GO TO 900
2111.   ;:*********************************************************
2112.   %***** CHECK WHETHER THE BOTTOMING CYCLE IS MORE EFFICIENT
2113.   %***** THAN THE THERMAL ROUTE--IF THE BOTTOMING cycLE 1s
2114.   %***** MORE EFFICIENT--I.E. EFF2*COPEE>COPAA>0--GO TO
2115.   %***** STATEMENT 2501; OTHERWISE STAY HERE.
2116.   Z***** (NOTE: IT KS ASSUMED IN THESE SWITCHES
2117.   %***** THAT EFF2<EFF1)
2118.   ;/*********************************************************
2119.   2401   IF (COPAA.LT.EFF2*COPEE) GO TO 2501
2120.   QC1=0  @ QC1 IS SPACE CONDITIONING LOAD MET ELECTRICALLY
2121.   QC2=QC @ QC2 IS SPACE CONDITIONING LOAD MET THERMALLY
2122.   IF (QP+QC/COPAA.GT.SOLE*EFF1*ALPHA2) GO TO 2402
2123.   BETAV=1
2124.   GAMMA=1
2125.   GO TO 2450
2126.   2402   IF (QP+QC/COPAA.GT.SOLE*EFF1* (ALPRA1+ALPHA2)) GO TO 2403
2127.   BETAV=1
2128.   GAMMA=(SOLE*EFF1*(ALPHA1+ALPHA2)-QP-QC/COPAA) /( SOLE*EFFl*ALPHAl )
2129.   GO TO 2450
2130.   2403   IF (QP.GT.SOLE*EFF1*(ALPHA1+ALPHA2)) GO TO 2404
2131.   BETAV=1
2132.   GAMMA=0
2133.   QC1=QC-COPAA*(SOLE*EFF1*(ALPHA1+ALPHA2)-QP)
2134.   QC2=QC-QC1
2135.   GO TO 2&50
2136.   2404   GAMMA=0
2137.   BETAV=(SOLE-QP) /(SOLE* (1-EFF1*(ALPHA1+ALPHA2)))
2138.   QC2=0
2139.   QC1=QC
2140.   2450   IF (BETAV*SOLE*EFF1.GT.ENGMAX) GO TO 7405
2141.   9450   EOUT=BETAV*SOLE*EFF1*(1+GAMMA*ALPHA1*EFF2)
2142.   IF (EOUT.GT.EEE+XLAX+QC1/COPEE) GO TO 2410
2143.   IF (EOUT.LT.EEE+QC1/COPEE-XOUT) GO TO 2420
2144.   GO TO 900
2145.   %*************************************************************
2146.   Z***** FIx ENGINE CLIPPING CONDITION--HAVE TO CHECK
2147.   Z***** WHETHER REVISION AFFECTS MEETING THE THERMAL LOAD
2148.   %*************************************************************
2149.   7405   QC1=0
2150.   QC2=QC
2151.   IF (QP+QC/COPAA.GT.ALPHA2*ENGMAX) Go To 7406
2152.   BETAV=1

HFSYS.PB-PNC/UGF002 08/17/78 14:42:52

2153.   GAMMA-1
2154.   Go TO 7458
2155.   7406   IF (QP+QC/COPAA.GT.ENGMAX*(ALPHA1+ALPHA2)) GO TO 7407
2156.   BETAV=1
2157.   GAMMA=(ENGMAX*(ALPHA1+ALPHA2)-QP-QC/COPAA) /(ALPHAl*ENGMAX)
2158.   GO TO 7458
2159.   7407   IF (QP.GT.ENGMAX*(ALPHA1+ALPHA2)) GO TO 7408
2160.   BETAV=1
2161.   GAMMA-O
2162.   QC1=QC-COPAA*(ENGMAX*(ALPHA1+ALPHA2)-QP)
2163.   QC2=QC-QC1
2164.   GO TO 7458
2165.   7408   GAMMA-O
2166.   BETAV=ENGMAX/(ENGMAX*(1-EFF1*(ALPHA1+ALPHA2))-EFF1*QP)
2167.   QC2=0
2168.   QC1=QC
2169.   7458   CALL UPDATE(HTSSTM,HTSSTO, SOLE-ENGMAX/ BETAV*EFF1), %
2170.                  RESIDQ,EFFEX,EFFST,HTSSTM)
2171.   SOLE=ENGMAX/(BETAV*EFFl )
2172.   GO TO 9450
2173.   %*************************************************************
2174.   %*****FIX Overproduction OF ELECTRICITY
2175.   %*************************************************************
2176.   2410   EOUT=EEE+XLAX
2177.   QC1=0
2178.   QC2=QC
2179.   IF (QP+QC/COPAA.GT.ALPHA2*EOUT/(1+ALPHA1*EFF2)) GO TO 2416
2180.   BETAV=1
2181.   GAMMA=1
2182.   GO TO 2468
2183.   2416   IF (QP+QC/COPAA.GT.EOUT* (ALPHA1+ALPHA2)) GO TO 2417
2184.   BETAV=l
2185.   GAMMA=(EOUT*(ALPHA1+ALPHA2)-QP-QC/COPAA)/(ALPHA1* %
2186.          (EOUT+EFF2*(QP+QC/COPAA)))
2187.   GO TO 2468
2188.   2417   EOUT=EEE+XLAX+QC/COPEE
2189.   IF (QP.GT.EOUT*(ALPHA1+ALPHA2)) GO TO 2418
2190.   BETAV=1
2191.   GAMMA-O
2192.   EOUT=(COPEE*(EEE+XLAX)+QC+QP*COPAA) / %
2193.                  (COPEE+COPAA*(ALPHA1+ALPHA2))
2194.   QC1=QC-COPAA*(EOUT*(ALPHA1+ALPHA2)-QP)
2195.   QC2=QC-QC1
2196.   GO TO 2468
2197.   2418   GAMMA=0
2198.   BETAV=EOUT/ (EOUT*(l-EFFl* (ALPHA1+ALPHA2))+EFF1*QP)
2199.   QC2=0
2200.   QC1=QC
2201.   2468   CALL UPDATE(HTQSTM,HTQSTO, SOLE-EOUT/ %
2202.          (BETAV*EFF1*(1+GAMMA*ALPHA1*EFF2)),RESIDQ,EFFEX,EFFST,HTQSTM)
2203.   CALL UPDATE (LTQSTM,LTQSTO,-RESIDQ,RESID, EFFEX, EFFLOT,LTQSTM)
2204.   RESID9=RESID9-RESID
2205.   GO TO 900
2206.   %*************************************************************
2207.   %***** FIX UNDERPRODUCTION OF ELECTRICITY--NEED BACKUP!
2208.   %*************************************************************
2209.   2420   EOUT=EEE-XOUT
2210.   QC1=0
2211.   QC2=QC
2212.   IF (QP+QC/COPAA.GT.ALPHA2*EOUT/(1+ALPHA1*EFF2)) GO TO 2426
```

```
2213.     BETAV=1
2214.     GAMMA= 1
2215.     GO 'To 2478
2216.     24 26   IF (Q P+QC/COPAA .GT. EOUT*(ALPHA 1+ALPHA2) ) GO TO 2427
2217.     BET AV= 1
2218.     GAMMA=(EOUT* (AL PHA1+ALPHA 2)-Q P-QC/COPAA) / (ALPHA1* %
2219.             ( EOUT+EFF2 * ( QP+QC/COPAA ) ) )
2220.     GO TO 2478
2221.     2427   F. OUT= EEE-XOUT+QC /COPEE
2222.     IF (QP. (, T. EOUT*(ALPHA 1+ALPHA2)) GO To 2428
2223.     BETAV= 1
2224.     GAMMA=0
2225.     F. OUT=(COPEE *( EE E-XOUT)+QC+QP*COPAA )/ %
2226.                                   (Cop EE+COPAA* (ALPHA1+ALPHA2 ) )
2227.     QC 1 =QC-COPAA* ( EOUT* ( ALPHA 1+ALPHA2 ) -QP )
2228.     QC 2 =Qc -QC 1
2229.     GO TO 2478
2230.     2428   GAMMA=0
2231.     BET AV=EOUT / ( EOUT* ( 1 -EFF 1 * (ALPHA 1+ALPHA2 ) ) +EFF 1 *QP )
2232.     QC 2 =0
2233.     QC 1 =Qc
2234.     2& 78   CALL UPDATE(HTSSTM, HTSSTO, SOLE-EOUT/ %
2235.             (BETAV*EFF1*(1+GAMMA*ALPHA1*EFF2)),RESIDQ,EFFEX,EFFST,HTSSTM)
2236.     E(K)=E (K)+RESIDQ/EFFB
2237.     GO TO 9oo
2238.     %*************************************************************
2239.     %*************************************************************
2240.     %***** REACH THIS SECTION WHEN EFF2*COPEE>COPAA>0
2241.     %*************************************************************
2242.     %*************************************************************
2243.     2501   QC1=0
2244.     QC2=QC
2245.     IF (QP+QC/COPAA.GT. SOLE*EFF 1*ALPHA2) GO TO 2502
2246.     BETAV=1
2247.     GAMMA=1
2248.     GO TO 2550
2249.     2502   IF (QP.GT. SOLE*EFF1*ALPHA2) GO TO 2503
2250.     BETAV=1
2251.     GAMMA=1
2252.     QC1=QC-COPAA*(SOLE*EFF1*ALPHA2-QP)
2253.     QC2=QC-QC1
2254.     GO TO 2550
2255.     2503   IF (QP.GT.SOLE*EFF1*(ALPHA1+ALPHA2) ) GO TO 250
2256.     BETAV=1
2257.     GAMMA=(SOLE*EFF1*(ALPHA1+ALPHA2 )-QP)/(SOLE*EFF1*ALPHA )
2258.     QC1=QC
2259.     QC2=0
2260.     GO TO 25S0
2261.     2504   GAMMA=0
2262.     BETAV=(SOLE-QP)/(SOLE* (1-EFF1*(ALPHA1+ALPHA2) ))
2263.     QC1=QC
2264.     QC2=0
2265.     2550   IF (BETAV*SOLE*EFF1 .GT. ENGMAX) GO TO 7590
2266.     9550   EoUT=BETAV *EFFI*SOLE*( 1+GAMMA*ALPHA1*EFF2)
2267.     IF (EOUT.GT.EEE+XLAX+QC1/COPEE) GO TO 2595
2268.     IF (EOUT. LT. EEE+QC1/COPEE-XOUT ) Go To 2590
2269.     GO TO 900
2270.     %*************************************************************
2271.     %***** FIX ENGINECLIPPING CONDITION--HAVETOCHECK
2272.     %***** WHETHERREVISIONAFFECTS MEETING THE THERMAL LOAD
```

HFSYS.PB-PNC/UGF002 08/17/78 14:42:52

```
2273.     %*************************************************************
2274.     7590   QC1=0
2275.     QC2=QC
2276.     IF (QP+QC/COPAA.GT.ALPHA2*ENGMAX ) GO TO 7591
2277.     BETAV=1
2278.     GAMMA=1
2279.     GO TO 7558
2280.     7591   IF (QP.GT.ALPHA2*ENGMAX) GO TO 7597
2281.     BETAV=1
2282.     GAMMA=1
2283.     QC1=QC-COPAA* (ALPHA2*ENGMAX-QP)
2284.     QC2=QC-QC1
2285.     GO TO 7558
2286.     7597   IF (QP.GT. ENGMAX*(ALPHA 1+ALPHA2)) GO TO 7593
2287.     BETAV=1
2288.     GAMMA=(ENGMAX*(ALPHA1+ALPHA2 )-QP)/(ALPHA1*ENGMAX)
2289.     QC1=QC
2290.     QC2=0
2291.     GO TO 7558
2292.     7593   GAMMA=0
2293.     BETAV=ENGMAX/ (ENGMAX* (1-EFF1*(ALPHA1+ALPHA2 ))+EFF1*QP)
2294.     QC1=QC
2295.     QC2=0
2296.     7558   CALL UPDATE(HTSSTM,HTSSTO ,SOLE-ENGMAX/ (BETAV*EFF1 ), %
2297.                         RESIDQ, EFFEX, EFFST, HTSSTM)
2298.     SOLE=ENGMAX/ (BETAV*EFF1 )
2299.     GO ro 9550
2300.     %*************************************************************
2301.     %*****FIX OVERPRODUCTION OF ELECTRICITY
2302.     Z*****************************************  ***************
2303.     2595   EOUT=EEE+XLAX
2304.     QC1=0
2305.     QC2=QC
2306.     IF (QP+QC/COPAA.GT.ALPHA2*EOUT/ (1+ALPHA1*EFF2  ) GO TO 2596
2307.     BETAV=1
2308.     GAMMA=1
2309.     GO TO 2600
2310.     2596   EOUT=EEE+XLAX+QC /COPEE
2311.     IF (QP.GT.ALPHA2*EOUT/(1+ALPHA1*EFF2)) GO TO 2597
2312.     BETAV=1
2313.     GAMMA=1
2314.     EOUT=(COPEE*(EEE+XLAX)+QC+QP*COPAA )/ %
2315.             (COPEE+(COPAA*ALPHA2)/(1+ALPHA1*EFF2) )
2316.     QC1=QC-COPAA*(ALPHA2*EOUT/ (1+ALPHA1*EFF2)-QP)
2317.     QC2=QC-QC1
2318.     GO TO 2600
2319.     2597   IF (QP.GT.EOUT*(ALPHA1+ALPHA2 )) GO TO 2598
2320.     BETAV=1
2321.     GAMMA=(EOUT*(ALPHA1+ALPHA2)-QP)   /(ALPHA1*(EOUT+EFF2*QP) )
2322.     QC1=QC
2323.     QC2=0
2324.     GO TO 2600
2325.     2598   GAMMA=0
2326.     BETAV=EOUT/(EOUT*(1-EFF1*(ALPHA1+ALPHA2 ))+EFF1*QP)
2327.     QC1=QC
2328.     QC2=0
2329.     2600   CALL UPDATE(HTQSTM, HTQSTO, SOLE-EOUT/ %
2330.             (BETAV*EFF1*( 1+GAMMA*ALPHA 1*EFF2)),RESIDQ, EFFEX,EFFST, HTQSTM)
2331.     CALL UPDATE(LTQST'M, LTQSTO, -RESIDQ,RESID, EFFEX,EFFLOT, LTQSTM)
2332.     RESID9=RESID9-RESID
```

```
2333.     GO TO 900
.2334.    %*****************************************************************
.? 335.   %***** FIX UNDERP RODUCTION OF ELEC TRIC IT}' --NEED BACKUP!
.2336.    .****  ******************  *7%*******************  ****************
2337.     2590    EOUT=E E E-XOL T
2338.     QC 1 =0
2339 .    QC 2=QC
2340.     I F ( QP+QC /CO PAA . GT . AI PHA2*E O' I ' ( 1 +ALPHA 1 *EF F2 ) ) GO TO 2696
2341.     BET AV= 1
2342 .    GAMMA= 1
.1343 .   GO TO 2601
2344 .    2696    EOUT=EF E-XOUT+QC /CO PEE
.1365 .   I F ( QP . GT . ALPHA 2 * EOUT / ( 1 +AL PHA 1 *EFF 2 ) ) GO TO 2697
2346 .    BETA\'= 1
2347.     GAMMA= 1
2348 -    EOUT = ( COPEE* ( E EF -XOUT ) +QC+QP *C O PAA ) / %
2349.                ( LOPE E+(COPAA*ALPHA2 ) / ( 1 +ALPHA 1*EFF 2 ) )
2350.     QC 1=QC-CO PAA* ( AL PHA 2* EOUT / ( 1 +ALPHA 1 *EFF2 ) -QP )
2351.     QC 2 =QC-QC 1
2 35? .   GO TO 2601
'?35 3.   2697    IF(QP. G 1. EOUT* (ALPHA 1 +ALPHA 2 ) ) GO TO 2698
2354.     BETAV= 1
2355.     GAMMA= ( EOUT* ( ALPHA 1+ALPHA2 ) -QP ) / (ALPHA 1 * ( EOUT+EFF2*QP ) )
2356 .    QC 1 =QC
2357 .    QC 2=0
2358.     GO TO 2601
2359.     2698    GAMMA=0
2360 .    BETAV=EOUT/ ( EOUT* (  -EFF 1 * ( ALPHA 1+ALPHA2 ) ) +EFF  *QP )
2361.     QC 1 =QC
2362.     QC2=0
2363.     2601    CALL U PDATE (HTSSTM, HTSSTO, SO LE-EOUT / "
2364.                ( BETA V*EFF I * ( 1 +GAMMA*ALPHA 1 *EFF2 ) ) , RES IDQ , EFFEX , EFFST , HTSSTM )
2365.     E(K) =E (K )+RESIDQ/ FFFB
2366 .    GO TO 900
2367.     %** **** ** *** * ***** ** ** * ****** * * ************ ******** * ******** * **
2368.     %  FIND MAXIMUM ENG IN E CONDIT ION S AND STORAGE MAXIMUMS
2369.     %******** ********** ********** ********** ********** ************ **
2370.     900    SOL E= EOUT / ( BETAV* EFF I * ( 1 +GAMMA*ALPHA 1 *EF F2 ) )
2371.     QOL T=SOLE* ( ( 1 -B ETAV' )+ BETA V*EFF I* ( ALPHA 2+ALPHA I * ( 1-GAMMA ) ) )
2372.     IF ( CO PEE . LT. 0 .1 ) CO PEE=1 .0
```



```
2373.     CALL UPDATE ( ESTORM , ES TOR , EOUT-EEE-IQC 1 *QC 1 /COPEE , %
2374.                                  RES IDE , EFFPC , EFFBA1 , PCS IZ )
2375-     IF ( COPAA. LT .0.1 ) COPAA=1 .0
237b.     CALL UPDATE ( LTQSTM, LTQSTO , QOUT-QP-QC 2/ COPAA, RES IDQ , %
2377.                              EFFEX , EFFLOT , LTQSTM )
2378.     RES ID9=RES ID9-RES IDQ
2379.     EY=GAMMA*ALPHA 1 *EFF 2
2380.     E Z= EOUT/ ( EFF 1 * ( 1 +EY ) )
2381.     TENGM=AMAX1 (T ENGM, EZ *EFF 1 )
2382.     BENGM=AMAX1 ( BENGM , EY*EZ*EFF 1 )
2383.     ENGM=AMAX 1 ( ENGM, EO UT )
2384.     TOT IEO=TOTTEO+EZ*EFF 1
2385.     TOTB EO=TOTB EO+EY*EZ *EFF 1
2386.     'TOT EO=TOTEO+EOUT
2387.     EBM=AMAX1 ( EBM, E(K ) *EFFB-EZ )
2388.     CALL U PDATE ( HTQSTM , HTQSTO , HTSSTO , RES IDQ , EFFEX, EFFST, HTQSTM )
2389.     CALL U PDATE ( L IQSTM , LTQSTO, -RES IDQ, R ! . i D , EFF EX, EFFLoT , LTQSTM )
2390.     RES ID9=RES ID9-RES I D
.? 391.   HTSSTO=0
2392.     HTQ=HTQSTO-HTQSO
2393.     FHE=AMIN 1 (E (K) *EFFB , EZ )
2394.     EBEM=AMAX1 (EBEM, FHE )
2395.     SHE=AMIN 1 (EZ-FHE , QSR )
2396.     HTQ9=0
2397.     IF (HTQ. LT . 0) HTQ9=-HTQ
2398.     STHE=AMIN1 (EZ-FHE-SHE , HTQ9 )
2399.     FHET=FHET+FHE
2400.     SHET=SHET+SHE
2401.     STHET=STHET+STHE
2402.     IF (E (K) . LE . . 1E-9 ) GO TO 6813
2403.     DELTA=QP 1-AMAX1 (0, LTQSO-LTQSTO ) -AMAX  (0, -HTQ)
2404.     IF (DELTA. LE .0 ) GO TO 6814
2405.     FFHW=DELTA/FHWEFF
2406.     6814    IF ( EFFB*E (K ) . LT . EZ ) GO TO 68  2
2407.     E (K)=E (K)+EZ* ( 1 /EFFBE-1 /EFFB )
2408.     GO TO 6811
2409.     6812    E (K) =E (K ) *EFFB/EFFBE
2410.     6811    FULL= FUEL+E (K)
2411.     6813    CONTINUE
2412.     RETURN
2413.     END
```

HWSYS.PB-PNC/UGF002 08/17/78 14:43:57

```
%PROGRAM NAME : HWSYS . JB
% JOHN C . BELL
% ENERGY PROGRAM
% OFFICE OF TECHNOLOGY ASSESSMENT
", COMPILED
      DATE : 12/ 19/77
      TIME: 12:59: 7
% PROGRAM HWSYS . JB FOR RUNNING SOLAR HOT WATER SYSTEMS
          AND CONVENTIONAL SYSTEMS WITH }I. ECTRIC BACKUP
%         OR ELECTRIC AND FOSSIL FUEL BACKUP .

%
      SUBROUTINE SYSTEM(K,QSH)
      DIMENSION E(8760),HWLOAD(168)
      IMPLICIT REAL(L)
      COMMON/AXXX/COPA,EHWEFF,HCOPM,CCOPM,EFFB,ENGMAX,EFF1,EFF2,ALPHA1,%
                  ALPHA2,HTQSTM,LTHTS,HTHTS,LTQSTM,LTLTS,HTLTS,HLHTH,%
                  FHWEFF,HLLTH,EFFBE,ESTORM,EFFBAT,PCSIZ,EFFPC,HEATMX,%
                  COOLMX,FAN,TL,TH,XXX,NHTQ,NLTQ,IGRID,ISOLAR,IA,ISMTH, %
                  IHR,IOFFPK
      COMMON/CXXX/COPAA,COPEE,EBM,EBEM,EEE,EFFEX,TENGM,BENGM,ENGM, %
                  ESR,ESTOR,EEFF,FFHW,FHET,FUEL,HTSSTM,HTQ,HTQI,HTQO, %
                  HTQSO,HTQSTO,LTQI,LTQO,LTQSO,LTQSTO,QA,QC,QC1,QC2, %
                  QC2Z,QE,QP,QS,QSR,RESID9,SHET,STHET,TOTEO,TOTBEO, %
                  TOTEO,HLHTL,HLLTL,EFFLOT,EFFST,IPRINT
      COMMON/XDATA/E,HWLOAD
      DATA IPRINT/3/
      %*************************************************************
```

HWSYS.PB-PNC/UGF002 08/17/78 14:43:57

```
      QC1=0
      QC2=0
      CALL UPDATE(LTQSTM,LTQSTO,QSR-QP,RESIDQ,EFFEX,EFFLOT,LTQSTM)
      QP=AMAX1(RESIDQ,0)
      IF (RESIDQ.LT.0) RESID9=RESID9-RESIDQ
      IF (IGRID.EQ.3) GO TO 600
      %*************************************************************
      E(K)=EEE+QC/COPEE+QP/EHWEFF
      QC1=QC
      GO TO 900
      %*************************************************************
      600   IF (COPEE.GT.0.01) GO TO 650
      E(K)=EEE
      FFHW=QP/FHWEFF
      FUEL=FUEL+QC/(COPAA*EFFB)+FFHW
      QC2=QC
      GO TO 900
      %*************************************************************
      650   E(K)=EEE+QC/COPEE
      FFHW=QP/FHWEFF
      FUEL=FUEL+FFHW
      QC1=QC
      GO TO 900
      %*************************************************************
      %  FIND MAXIMUM ENGINE CONDITIONS AND STORAGE MAXIMUMS
      %*************************************************************
      900   CONTINUE
      RETURN
      END
```

PVSYS. PB-PNC/UGF002 08/17/78 14:42:21

```
1.        % PROGRAY NAME: PVSYS.JB
2.        % JOHN C. BELL
3.        % ENERGY PROGRAM
4.        % OFFICE OF TECHNOLOGY ASSESSMENT
5.        % COMPILED
6.        %     DATE:   1/12/78
7.        %     TIME: 13: 6:43
8.        % PROGRAM PVSYS.JB FOR RUNNING PHOTOVOLTAIC SYSTEMS WITH
9.        %         ELECTRICITY, FOSSIL FUEL, OR BoTH FOR BACKUP
10.       %
11.       %
12.       %
1000.     SUBROUTINE SYSTEM(K,QSH)
1001.     DIMENSION E(8760),HWLOAD( 168)
1002.     IMPLICIT REAL(L)
1003.     COMMON/AXXX/COPA,EHWEFF,HCOPM,CCOPM, EFFB,ENGMAX,EFF1,EFF2,ALPHA1,%
1004.                 ALPHA2, HTQST?!,LTHTS, HTHTS, LTQSTM, LTLTS,HTLTS, HLHTH,%
1005.                 FHWEFF,HLLTH,EFFBE, ESTORM,EFFBAT,PCSIZ,EFFPC,HEATMX,%
1006.                 COOLMX, FAN,TL,TH,XXX, NHTQ,NLTQ,IGRID, ISOLAR, IA, ISMTH,%
1007.                 IHR,IOFFPK
1008.     COMMON/CXXX/COPAA,COPEE, EBM,EBEM, EEE,EFFEX,TENGM, BENGM,ENGM,%
1009.                 ESR, ESTOR,EEFF,FFHW,FHET ,FUEL,HTSSTM,HTQ,HTQI,HTQO,%
1010.                 HTQSO,HTQSTO,LTQI,LTQO ,LTQSO, LTQSTO,QA,QC,QC 1,QC2,%
1011.                 QC2Z,QE,QP,QS,QSR,RESID9, SHET,STHET,TOTTEO,TOTBEO,%
1012.                 TOTEO,HLHTL,HLLTL, EFFLOT,EFFST, IPRINT
1013.     COMMON/XDATA/E,HWLOAD
1014.     DATA IPRINT/1/
2000.     QC1=0
2001.     QC2=0
2002.     QHOUR=QP
2003.     IF (COPAA.LE.0.001) GO TO 32
2004.     QHOUR=QP+QC/COPAA
2005.     32   CALL UPDATE(LTQSTM,LTQSTO,QSR-QHOUR, RESIDQ,EFFEX,EFFLOT,LTQSTM)
2006.     IF (RESIDQ.LT.0) RESID9=RESID9-RESIDQ
2007.     XTEMP=AMAX1(0,QP-(QHOUR-RESIDQ) )
2008.     IF (XTEMP.LE.0.001 ) QC=AMAX1(0,QC-COPAA*(QHOUR-AMAX1(0,RESIDQ)-QP) )
2009.     QP=XTEMP
2010.     IF (QSH.GT.0) QC2Z=QSH-QC
2011.     IF (QSH.LE.0) QC2Z=-QSH-QC
2012.     %*************************************************************
2013.     % PHOTOVOLTAIC CALCULATIONS
2014.     %*************************************************************
2015.     ESR=ESR*EFFPC
2016.     XTEMP=AMIN1 (ESR,EEE)
2017.     ESR=ESR-XTEMP
2018.     EEE=EEE-XTEMP
2019.     IF (IGRID.EQ.0) GO TO 550
2020.     IF (IGRID.EQ.3) GO TO 570
2021.     XTEMP=AMIN1(ESR,QC/COPEE)
2022.     ESR=ESR-XTEMP
2023.     QC=QC-XTEMP*COPEE
2024.     XTEMP=AMIN1(ESR,QP/EHWEFF)
2025.     ESR=ESR-XTEMP
2026.     QP=QP-EHWEFF*XTEMP
2027.     CALL UPDATE (ESTORM,ESTOR,ESR/(EFFPC**2)-QC/COPEE-QP/EHWEFF-EEE , %
2028.                 RESIDE, EFFPC,EFFBAT,PCSIZ )
2029.     E(K)=RESIDE
2030.     IF (RESIDE.LT.0) E(K)=RESIDE*EFFPC
2031.     QC1=QC
2032.     Go To 900
```

PVSYS.PB-PNC/UGF002 08/17/78 14:42:21

```
2033.     570   IF (COPEE.LT.0.001) GO TO 571
2034.     QC1=QC
2035.     XTEMP=AMIN1(QC/COPEE,ESR )
2036.     ESR=ESR-XTEMP
2037.     QC=QC-COPEE*XTEMP
2038.     CALL UPDATE(ESTORM, ESTOR,ESR/(EFFPC**2)-QC/COPEE-EEE,RESIDE,%
2039.                 EFFPC, EFFBAT,PCSIZ)
2040.     E(K)=RESIDE
2041.     IF (RESIDE.LT.0) E(K)=RESIDE*EFFPC
2042.     FFHW=QP/FHWEFF
2043.     FUEL=FUEL+FFHW
2044.     GO TO 900
2045.     571   CALL UPDATE(ESTORM, ESTOR,ESR/ (EFFPC**2)-EEE,RESIDE, EFFPC,%
2046.                         EFFBAT,PCSIZ)
2047.     E(K)=RESIDE
2048.     IF (RESIDE.LT.0) E(K)=RESIDE*EFFPC
2049.     FFHW=QP/FHWEFF
2050.     QA=QC/(COPAA*EFFB)
2051.     FUEL=FL!EL+QA+FFHW
2052.     EBM=AMAX1(EBM,QA*EFFB)
2053.     QC2=QC
2054.     GO TO 900
2055.     550   IF (COPEE.LT.0.001) GO TO 555
2056.     QCS=QC
2057.     XTEMP=AMIN1(QC/COPEE, ESR)
2058.     ESR=ESR-XTEMP
2059.     QC=QC-COPEE*XTEMP
2060.     CALL UPDATE(ESTORM,ESTOR, ESR/(EFFPC**2)-QC/COPEE-EEE,RESIDE,%
2061.                 EFFPC, EFFBAT,PCSIZ)
2062.     QC1=QCS
2063.     IF (RESIDE.LE.0) GO TO 559
2064.     XTEMP=AMAX1(0, RESIDE-QC/COPEE)
2065.     IF (XTEMP.LT.0. 0001) QC=RESIDE*COPEE
2066.     QC1=QCS-QC
2067.     EEE=XTEMP
2068.     GO TO 672
2069.     555   CALL UPDATE(ESTORM, ESTOR,ESR/ (EFFPC**2)-EEE,RESIDE, EFFPC, Z
2070.                         EFFBAT,PCSIZ)
2071.     IF (RESIDE.LE.0) GO TO 558
2072.     EEE=RESIDE
2073.     GO TO 672
2074.     559   QC=0
2075.     558   EEE=0
2076.     XTEMP=AMIN1(QP,-RESIDE*EHWEFF)
2077.     QP=QP-XTEMP
2078.     RESIDE=RESIDE+XTEMP/EHWEFF
2079.     CALL UPDATE (LTQSTM,LTQSTO, -RESIDE ,RESIDQ, EFFEX,EFFLOT,LTQSTM)
2080.     RESID9=RESID9-RESIDQ
2081.     E(K)=RESIDE
2082.     672 FFHW=0
2083.     IF (COPAA.GT.0.001) GO TO 673
2084.     EEE=EEE+QC/COPEE
2085.     COPAA=1
2086.     QC1=QC1+QC
2087.     QC=0
2088.     673   IF (ALPHA2*EEE.GE.QC/COPAA+QP) GO TO 6722
2089.     IF (COPEE.GT.0. .1) GO TO 6721
2090.     6729  X=QP-ALPHA2*EEE
2091.     IF (X.LT.0) GO TO 6728
2092.     FFHW=X/FHWEFF
```

```
QA=FFHW+(QC/COPAA ) /EFFB
GO TO 6727
6728    QA=(QC/COPAA+X)/EFFB
6727    QS=0
GO TO 6723
6722    QA=0
QS=ALPHA2*EEE -QP-QC /COPAA
6723    QE=EEE/EFF1
QC2=QC
GO ro 6730
6721    IF (EFF1 * ( CO PEE+AL PHA2*COPAA ) . LE . CO PAA*EFFB ) GO TO 6722
IF ( ALPHA 2* ( EEE+QC / CO PEE ) . LT . QP ) GO TO 6 7,? 5
QA=0
QE=(EEE+ (QP+QC /COPAA-ALPHA2 *EEE ) / (ALPHA 2+COPEE/COPAA) ) /EFF 1
QS=0
QC 1=QC 1+COPEE* ( EFF 1 *QE-EEE )
QC2=QC-QC 1
GO TO 6730
6725    QE= (EEE+QC/COPEE) /EFF1
QA=(QP-ALPHA2* (EEE+QC /COPEE ) ) /FHWEFF
FFHW=QA
```



```
QS=0
QC 1=QC 1+QC
6730    FUEL= FUEL+QA+QE/ EFFBE
CALL UPDATE (LTQSTM, LTQSTO , QS , RES IDQ , EFFEX , EF FLOT , LTQSTM )
RES ID9=RES ID9-RES IDQ
EZ=QE*EFF 1
TENGM=AMAX1 (TENGM , EZ )
ENGM=TENGM
TOTTEO=TOTTEO+EZ
TOTEO=TOTTEO
EBM=AMAX1 ( EBM, (QA-FFHW) *EFFB )
EBEM=AMAX1 (EBEM, QE )
Go TO 900
Z*********************  *********************  ********************
z FIND MAXIMUM ENG INE CONDI TION S AND STORAGE MAX IMUMS
Z****  *********************  ***************  ********************
900    CONT INUE
IF ( 10FFPK . EQ .1 ) CALL OFFPK1 (K> QP , QC , QSH, COPEE , EHWEFF )
RETURN
END
```

```
COLI l. PB-PNC/UGF002 08/17/78 14:46:07

1.          % PROGRAM  NAME: COLL 1.JB
2.          % JOHN C . BELL
3.          % ENERGY PROGRAM
4.          % oFF IC E OF TECHNOLOGY  ASSESSMENT
5.          % COMP 1 LED
6.          %      DATE : 12/ 30/77
7.          %      TIME :   1 : 18:6
8.          % PROGRAM COLL 1. JB FOR RUNNING FLAT PLATE COLLECTORS AND
9.          %          TWO DIMENSIONAL TRACKING COLLECTORS WITH
10.         %          ELECTRIC AND THERMAL  OUTPUT
11.         %
12.
13.         %
2000 .      SUBROUTINE LOLL (I SYS1)
2001 .      DIMENSION DAYLEN( 365) ,SONOON( 365) ,DECL( 365)
2 []0 2.    DIXENS1ON RADDN (8760) ,RADTH (8760)
2003.       DIMENSION EQ(4), A(4) ,B(4)
2004.       IMPLICIT  REAL(L)
2005.       COMMON /B XXX/CRATIO , TRANS , AREAC , LAT , LONG , LONGST , TILT , AZ , XKE, BETA, %
2006.                  CELLEF , ELECAB , FC , ULOSS , COVERN , FR , ALPHA , FLOUR ,DENS , CP , %
2007.                  ABC, ,ABD,APWID,COLEN,FOCLEN, COSPAC,RIMANG,REFLEC,CELLL, %
2008.                  ALPHAV,YYY(5) ,ISYS, IFLOW,IEW,IYYY(5)
2 D 09.     DIMENSION SCEL(37), ISCEL(8)
2010 .      EQUIVALENCE (SCEL(1),CRATIO) ,(ISCEL(1),ISYS)
'20 11 .    DATA A,B/-.2E-3,.4197,-.32265E 1,-.903E-1,0. ,-.7351E1,-.93912E1,-. 3661/
2012.       PIE2=6.2831853
2013 .      PIEV=360/(PIE2)
2014.       READ(24) DECL
2015.       REWIND 25
2016.       READ(25) RADDN,RADDN,RADDN,RADTH
2017.       READ(12,*,PROMPT='FILE NUMBER FOR COLLECTOR COEFFICIENTS: ') IF
2018 .      IF (IF.LE.0) GO TO 1120
2019.       REWIND IF
2 (0.! 0.   READ(IF) SCEL,ISCEL
202 I .     1120   READ(12, 99, PROMPT='LIST/CHANGE VARIABLES AND VALUES: ') ITST
20'.22.     99   FORMAT(A4)
2023.       IF (ITST.EQ.'YES') GO TO 1123
20 '24 .    IF (ITST.EQ.'NO') GO TO 1124
2025 .      IF (ITST.EQ.'NON') Go TO 1140
2026.       Go TO 1120
2027.       1123   WRITE(13,900) CRATIO,TRANS,AREAC,LAT ,LONG,LONGST,TILT, Z
2028.                             AZ,XKE,BETA,CELLEF, ELECAB,FC,ULOSS,COVERN ,%
2029.                             FR,ALPHA,FLOWR>DENS ,CP
2030.       WRITE(13,901) ISYS.IFLOW
2031.       900    E. RMAT(' _____REAL NUMBERS_____'/%
2032.       '   #",4x, 'VALUE' ,4x,'DEFINITI ON"/Z
2033.       '   1 ',1PE10.3,' :CONCENTRATION RATIO (DIM)'/%
.1034 .     '   2 ',1PE10.3, ' :OPTICAL EFFICIENCY OR TRANSMISS.(.LE.1.00) '/%
2035.       '   3 ' ,1PE10.3, " :COLLECTOR AREA (M**2)'/%
2036.       '   4 ',1FE10.3, ' :LATITUDE (DEG)'/%
.2037.      '   5 ',1PE10.3,' :LONGITUDE (DEG)' /'Z
2038.       '   6',1PE10.3," :STANDARD LONGITUDE (DEG)'/%
2039.       '   1 ' ,LPE10.3,' :COLLECTOR TILT ABOVE HORIZONTAL (DEG)'/%
2040.       '   8', 1PE10.3, ' :COLLECTOR ANGLE WRT SOUTH (DEG)'/%
2041.       '   9', 1PE10.3,' :COLLECTOR HEAT REMOVAL FACTOR (KW/(M**2*C))' /%
2042.       ' 10 ', 1PE10.3, ' :CELL TEMP COEFF (1/DEG CENT)'/%
2043.       ' 11 ',1PE10.3,' :CELL EFFIC @ 28C (.LE. 1.00)'/%
'204&.      ' 12 ' ,1PE10.3, ' :CELL ABSORPTIVITY (.LE.1.00)'/%
2045.       '13', 1PE10.3,' :FRAC OF RECEIVER COVERED WITH CELLS (.LE.1.00)'/%
2046 .      '14', 1PE10.3, ' :THERMAL LOSS COEFF (KW/M**2*C)'/%
```

```
COLL1.PB-PNC/UGF002 08/17/78 14:46:07

2047.       '  15', 1PE10.3, ' :NUMBER OF GLASS COVERS (DIM)'/%
2048.       ' 16 ' ,1PE10.3, " :COLLECTOR HEAT REMOVAL FACTOR (.LE.1.00)'/%
2049.       '  17', 1PE10.3, ' :ABSORB OF THERMAL-ONLY SURFACES (.LE. 1.00)'/%
2050.       ' 18 ' ,1PE10.3,' :FLOW RATE (CM**3/SEC*M**2)' /%
2051.       ' 19 ', 1PE10.3, ' :FLUID DENSITY (GM/CM**3)'/%
2052.       ' 20 ', 1PE10.3,' :FLUID SPEC. HEAT (CAL/GM*C)')
2053.       901    FORMAT(' _________INTEGERS __________'1%
2054.       '   #',4X,'VALUE' ,4x,'DEFINITION' /%
2055.       '   1 ' ,16,4X, ' :OUTPUT--ELEC(1 ), ELEC & THERMAL(2), THERMAL(3) "/Z
2056.       '   2 ' ,16,4x,' :CONST FLOW RATE(l), CONST OUTPUT TEMP(2)')
2057.       1124   READ(12,*,PROMPT='VAR # AND VARIABLE: ') IV,V
2058.       IF (IV.LE.0) GO TO 1125
2059.       IF (IV.GT.37) GO TO 1124
2060.       SCEL(IV)=V
2061.       GO TO 1124
2062.       1125   READ(12, *,PROMPT='VAR # AND IVARIABLE: ') IV,I
2063.       IF (IV.LE.0) GO TO 1126
2064.       IF (IV.GT.8) GO TO 1125
2065.       ISCEL(IV)=I
2066.       GO TO 1125
2067.       1126   READ(12,*,PROMPT='FILE NUMBER TO STORE COLLECTOR COEFF: ") IV
2068.       IF (IV.LE.0) GO TO 1140
2069.       REWIND IV
2070.       WRITE(IV) SCEL,ISCEL
2071.       %
2072.       %    COMPUTE RISETIME AND SETTING TIME OF SUN AND SOLAR ANGLES
2073.       %
2074.       1140   LAT=LAT/PIEV
2075.       TILT=TILT/PIEV
2076.       AZ=AZ/PIEV
2077.       ISYS1=ISYS
2078.       SINLAT=SIN(LAT)
2079.       COSLAT=COS(LAT)
2080.       TANLAT=TAN(LAT)
2081.       SINTLT=SIN(TILT)
2082.       COSTLT=COS(TILT)
2083.       SINAZ=SIN(AZ)
2084.       COSAZ=COS(AZ)
2085.       AREACR=AREAC/CRATIO
2086.       XFLASSF=0.004186*FLOWR*CP*DENS*CRATI0
2087.       ALPHAV=FC*ELECAB+(1-FC )*ALPHA
2088.       DO 50 1=1,365,1
2089.       DO 2500 J=1,4
2090.       EQ(J)=A(J)*COS((PIE2*(J-1)*I)/365.25)+B(J)*SIN((PIE2*(J-1)*I)/365.25)
2091.       2500   CONTINUE
2092.       RISANG=ACOS ((-TANLAT)*TAN(DECL (I)))
2093.       DAYLEN( I)=PIEV*RISANG/7 .5
2094.       SONOON( I)=13.5-((EQ(1)+EQ(2)+EQ(3)+EQ(4)+4* (LONGST-LONG) )/60)
2095.       50 CONTINUE
2096.       IF (IFLOW.NE.1) FR=1
2097.       RETURN
2098.       %
2099.       % HOURLY COMPUTATION BEGINS
2100.       %
2101.       ENTRY COLL01(K,TFIN,TFOUT,TA,QSR, ESR)
2102.       IF (RADTH(K).LE.0) GO TO 38
2103.       IF (RADDN (K)+RADTH(K).LE. 0.0001) GO TO 38
2104.       TAIR=TA-273
2105.       I=(K-1)/24
2106.       J=K-24*(I)
```

```
2107.      I=I+1
2108.      TD=J-0 .5- SONOON ( I ) +DAYLEN ( 1 ) ' 2
2109.      I F ( ( TD . LT . 0) . OR . ( TU .(: T . DAYLEN ( 1 ) ) ) GO TO 38
2110.      RI SANG =AC (I\ ( ( -TAN I AT) *TAN (DEC L ( I ) ) )
2111.      I F ( CRAT I O . L 1' .1. > ) GO TO 6 1
2112.      RADTOT=T RANS *RADDN ( K ) *C RAT IO
2113.      T t ( I SYS . EQ . 1 ) GO 1'0 224
2114.      GO TO 3 , .'.
2115.      6 1 HRANG= ( SONOON ( I ) -1 ) *RI SANG/ (DAYLEN ( T ) / 2 )
2116.      S I NDEC = s I N(DEC [. ( I ) )
2117.      Los DEC =COS (DECL ( I ) )
2118.      COSHRA=COS ( HRANG)
2119.      C 1 =S INDEC* SI NLAT
2120.      C ?= COSDEC*COSLAT *COSHRA
2121.      COSTH E=C 1 +C 2
2122.      IF (COSTHE. LE. O) GO TO 38
2123.      COSINC=C1*COSTLT-SINDEC*COSLAT*SINTLT*COSAZ+              %
2124.              C2*COSTLT+                                        %
2125.              COSDEC*SINLAT*SINTLT*COSAZ*COSHRA+                %
2126.              CO SDEC*SINTLT*SINAZ *SIN ( HRANG )
2 27.      COS INC=AMAX1 (o, COSINC )
2 28.      RADDIF=AMAX1 ( ( ( RADTH (K) -RADDN (K  *C OS THE ) * ( 1 +COS TLT ) / 2 ) %
2 29.       +RADTH ( K) * ( 1 -COSTLT ) / 10,0 )
2 30.      I F ( T SYS . EQ. 1 ) Go To 223
2 31.      IF ( COVERN .GE .1.5 ) GO TO 221
2 32.      R,\ DTOT=TRANS*RADDN (K)* ( CO SINC* *  .25 ) +RADD I F*0. 89* TRANS
2 33.      GO TO 222
2 34.      221 MD TOT=TRANS*RADDN(K)*(COS L NC ** 1  5 ) +RADD I F*o. 80* TRANS
2 35.      222  IF" ( IFLOW. EQ .1 ) GO To 225
2 35.      TTEMP= (T FIN+TFOUT ) / 2
2 37.      DENOM= 1- ( FC*RADTOT*CELL F*BE T I-L' LOSS  /XKE
2 38.      GO TO 226
2139.      225 TTEMP=TFIN
2140.      DENOM= 1 ~FR*FC*BET i.* CELL F*RADTOT* ( 1 /XKE+0 . 5/ XMASSF)
2141.      226  AT EMPO=RADTO : * ( AL PHAV-FC*CELLEF* ( 1 -BETA* (TTEMP-28 ) ) )
2142.      QSR=AMAX1 ( FR*AR t ACR* ( AT EMPO-ULOSS* (TTEMP-TAIR ) ) /DENOM, o)
2143.      IF ( ( I FLOW . EQ .2 ). AND . (AL EMPO-ULO S S* (TFOUT-TAIR ) . LE .0 ) ) QSR=0 .
2144.      I F ( I SYS . NE .2 ) GO TO 321
2145.      IF ( IFLOW. EO .21 i ( F LL=TTEMP+QSR/ ( XKE*AREACR )
2146.      IF ( IF LOW. Eo 1. 1 ) 1 (< ELL=TFIN+QSR* ( 0. 5/XMASS F+1 /XKE ) /AREACR
2147.      ESR=AREAC , * R *RADTOT*CELLEF* ( l-BETA* (TCELL-28 ) )
2148.      GO TO 3 2 1
2149.      2 23 RADT , =RADDN (K) *coS INC+RADDIF
```



```
2 150.     224 QSR=0
:151.      XNUMER=AREAC R* RADTOT *FC*CELLEF* ( 1 -BETA* (l,\ IR+ALPHAV*RADTOT /XKE-28 ) )
2152 .     'L SR=XNUMER/ ( 1-CELLEF*BETA *RAD O T/XKE )
2 153.     3 2 1 I F ( QSR . LE . 0 ) QSR=0 .
2154.          IF (ESR. LE.0) ESR=0.
2155.      RETURN
2156.      38 QSR=0
2157.      ESR=0
2158.      RETURN
2159.      %
2 160.     % OUTPUT STATEMENT S
.! 161.    %
2162 .     ENTRY COLLO 2
2163.      IF ( I SYS . EQ . I ) GO TO 17
2164 .     I F ( I FLOW. EQ . 2 ) GO To 17
.2165.     17    IF (CRATIO . GT .1.5 ) WR ITE ( 13, 454)
2166.      454   FORMAT ( ' TWO-AXI S TRACKI NG SYSTEM ' )
2 167.     IF ( CRAT TO . LT .1.1 )    WRITE( 13, &50)
2168.      450   FORMAT ( ' FLAT PLATE COLLECTOR' )
2 169.     IF ( ISYS . EQ .1 )      WRITE ( 13,451 )
2170.      451 FORMAT ( 1X, ' PASSIVE ELECTRIC-ONLY COLLEC TOR' )
2171.      IF ( ISYS . EQ .2 )       WRITE ( 13> 452)
2172.      452 FORMAT(1X,'COMB INED THERMAL AND ELEC TRIC COLLECTOR' )
2173.      IF ( ISYS . EQ. 3 )      WRITE ( 13,45))
2174.      453 FORMAT ( 1X, 'THERMAL-ONLY COLLECTOR ' )
2175.      IF( IFLOW. EQ. 1 ) WRITE(13, 455)
2176.      455   FORMAT ( ' CONSTANT FLOW RATE' )
2177.      IF(IFLOW. EQ. 2) WRITE( 13,456)
2178.      456   FORMAT ( ' CONSTANT OUTPUT TEMPERATURE' )
2179.      RETURN
2180.      %
2181.      % OUTPUT SUMMARY
2182.      %
2183.      ENTRY COLL03
2184.      LAT=LAT*P IEV
2185.      AZ= =AZ*P I EV
2186.      T I LT=TILT*PIEV
2187.      WRITE ( 13. 900) CRAT IO, TRANS , AREAC , LAT , LONG , LONGST , TI LT , %
2188.                       AZ, XKE , BETA , CELLEF , EL ECAB , FC , ULOS S , COVERN , %
2189.                       FR , ALPHA , FLOWR , DENS , CP
2190.      WRITE( 13,901) ISYS, IFLOW
2191.      RETURN
2192.      END
```

COLL2. PB-PNC/UGF002 08/17/78 14:47:14

```
1.        Z PROGRAM NAME: COLL2.JB
7.        % JOHN C. BELL
3.        % EN ERGY PROGRAM
4.        % OFFICE OF TECHNOLOGY ASSESSMENT
5.        % COMPILED
b.        %     DATE:  1/ 4/78
7.        %     TIME:  23:51:24
8.        % PROGRAM COLL2.JB FOR RUNNING ONE-DIMENSIONAL TRACKING
9.        %         COLLECTORS WITH THERMAL AND ELECTRIC OUTPUT
10.       %
11.
12.       %
13.       %
2000.     SUBROUTINE COLL(ISYS1)
2001.     DIMENSION DAYLEN(365),SONOON(365),DECL(365)
2002.     DIMENSION RADDN(8760),RADTH(8760)
2003.     DIMENSION EQ(4),A(4),B(4)
2004.     IMPLICIT REAL(L)
2005.     COMMON/BXXX/CRATIO,TRANS,AREAC,LAT,LONG,LONGST,U1,U2,XKE,BETA,%
2006.                 CELLEF,ELECAB,FC,ULOSS,COVERN,FR,ALPHA,FLOWR,DENS,CP,%
2007.                 T0,T1,APWID,COLEN,FOCLEN,COSPAC ,RIMANG,REFLEC,CELLL, %
2008.                 ALPHAV,YYY(5),ISYS,IFLOW,IEW,IYYY(5)
2009.     DIMENSION SCEL(37),ISCEL(8)
2010.     Equivalence (SCEL(1),CRATIO),(ISCEL(1),ISYS)
'2011.    DATA A,B/-.2E-3,.4197,-.32265E1,-.903E-1,0.,-.7351E1,-.93912E1,-.3661 /
2012.     PIE2=6.2831853
2013.     PIEV=360/(PIE2)
2014.     READ(24) DECL
2015.     REWIND 25
2016.     READ(25) RADDN,RADDN,RADDN,RADTH
72017.    READ(12,*,PROMPT=' FILE NUMBER FOR COLLECTOR COEFFICIENTS: ") IF
2018.     IF (IF.LE.0) GO TO 1120
2019.     REWIND IF
2020.     READ(IF) SCEL,ISCEL
'20.?.1.  1120   READ(12,99,PROMPT=' LIST/CHANGE VARIABLES AND VALUES: ') ITST
2022.     99   FORMAT(A4)
2023.     IF (ITST.EQ.'YES') GO TO 1123
2024.     IF (ITST.EQ.'NO') GO TO 1124
2025.     IF (ITST.EQ. 'NON') GO TO 1140
2026.     GO TO 1120
2027.     1123   WRITE(13,900) CRATIO,TRANS,AREAC,LAT ,LONG,LONGST,U1,%
2028.                          U2,XKE,BETA,CELLEF,ELECAB,FC,%
2029.                          ALPHA,FLOWR,DENS,CP,T0,T1,APWID,COLEN, Z
.2030.                         FOCLEN,COSPAC,RIMANG,REFLEC,CELLL
2031.     WRITE(13,901) ISYS,IFLOW,IEW
2032.     900   FORMAT(' _______REAL NUMBERS_______'/%
2033.     '  #',4X,'VALUE' ,4X,'Definition '/z
2034.     '  1', 1PE10.3, '  :CONCENTRATION RATIO (DIM)'/%
2035.     '  2 ',1PE10.3,'  :OPTICAL EFFICIENCY OR TRANSMISS. (.LE.1.00)'/%
2036.     '  3', 1PE10.3,'  :COLLECTOR AREA (M**2)'/%
2037.     '  4 ',1PE10.3,'  :LATITUDE (DEG)'/%
2038.     '  5' ,1PE10.3,"  :LONGITUDE (DEG) '/Z
2039.     '  b', 1PE10.3, '  :STANDARD LONGITUDE (DEG) '/Z
2040.     '  7', 1PE10.3, '  :U1--THERMAL LOSS COEFF PARAMETER (KW/(M**2*C) )'/%
2041.     '  8', 1PE10.3,'  :U2--THERMAL LOSS COEFF PARAMETER (KW/(M**2*C))'/%
2042.     '  9', 1PE10.3,'  :CELL HEAT REMOVAL FACTOR (KW/C*M**2)'/%
2043.     ' 10 ', 1PE10.3, '  :CELL TEMP COEFF (1/DEG  CENT)'/%
2044.     '11', 1PE10.3,'  :CELL EFFIC @ 28C (.LE.1.00)'/%
2045.     ' 12 ', 1PE10.3, '  :CELL ABSORPTIVITY (.LE.1.00)'/%
2046.     ' 13 ',1PE10.3,'  :FRAC OF CELL AREA COVERED WITH CELLS (.LE.1.00)'/%
```

COLL2. PB-PNC/UGF002 08/17/78 14:47:14

```
2047.     ' 17 ',1PE10.3,'  :ABSORP OF THERMAL-ONLY SURFACES (.LE.1.00)'/%
2048.     '  18',1PE10.3, '  :FLOW RATE (CM**3/SEC*M**2)'/%
2049.     ' 19 ', 1PE10.3,'  :FLUID DENSITY (GM/CM**3)'/%
2050.     ' 20 ',1PE10.3,'  :FLUID SPEC. HEAT (CAL/GM-C)'/%
2051.     ' 21 ',IPE10.3, '  :TO--THERMAL COEFF TEMPERATURES (DEG CENT)'/%
2052.     ' 22 ',1PE10.3,' :T1--THERMAL COEFF TEMPERATURES (DEG CENT)'/%
2053.     ' 23 ',1PE10.3,' :COLLECTOR WIDTH(M)'/%
2054.     " 24 ',1PE10.3, ' :COLLECTOR LENGTH(M)'/%
2055.     ' 25 ',1PE10.3,"  :FOCAL LENGTH (H)'/%
2056.     ' 26 ',1PE10.3,'  :CENTER TO CENTER SPACING OF COLLECTORS(M)"/%
2057.     ' 27 ',1PE10.3,'  :RIM ANGLE--EDGE-FP-CENTER (DEG)'/%
2058.     " 28 ',1PE10.3, ' :OPTICAL REFLECTIVITY (.LE.1.00)'/%
2059.     ' 29 ',1PE10.3,' :CELL LENGTH (M)')
2060.     901   FORMAT(' _________INTEGERS__________'/%
2061.     '  #',4X,'VALUE',4X, 'DEFINITION'/%
2062.     '  1 ',16,4X, ' :OUTPUT--ELEC(1), ELEC & THERMAL(2), THERMAL(3)'/%
2063.     '  2 ",16,4X, ' :CONST FLOW RATE(l), CONST OUTPUT TEMP(2) '/%
2064.     '  3 ',I6,4X,' :EAST-WEST AXIS(l), NORTH-SOUTH POLAR AxIs(2)')
2065.     1124   READ(12,*,PROMPT=' VAR # AND VARIABLE: ') IV,V
2066.     IF (IV.LE.0) GO TO 1125
2067.     IF (IV.GT.37) GO TO 1124
2068.     SCEL(IV)=V
2069.     GO TO 1124
2070.     1125   READ(12,*,PROMPT=' VAR # AND IVARIABLE: ') IV,I
2071.     IF (IV.LE.0) GO TO 1126
2072.     IF (IV.GT.8) GO TO 1125
2073.     ISCEL(IV)=I
2074.     GO TO 1125
2075.     1126   READ(12,*,PROMPT='FILE NUMBER TO STORE COLLECTOR COEFF: ") IV
2076.     IF (IV.LE.0) GO TO 1140
2077.     REWIND IV
2078.     WRITE(IV) SCEL,ISCEL
2079.     %
2080.     %    COMPUTE RISETIME AND SETTING TIME OF SUN AND SOLAR ANGLES
2081.     %
2082.     1140   ISYS1=ISYS
2083.     LAT=LAT/PIEV
2084.     RIMANG=RIMANG/PIEV
2085.     TANLAT=TAN(LAT)
2086.     SINRIM=SIN(RIMANG)
2087.     COSRIM=COS(RIMANG)
2088.     DO 50 1=1,365,1
2089.     DO 2500 J=1,4
2090.     EQ(J)=A(J)*COS ((PIE2*(J-1 )*1)/ 365.25)+B(J)*SIN( (PIE2*(J-1 )*1)/365.25)
2091.     2500   CONTINUE
2092.     RISANG=ACOS( (-TANLAT)*TAN (DECL(I)))
2093.     DAYLEN(I )=PIEV*RISANG/ 7.5
2094.     SONOON(I ),13. 5-((EQ(1)+EQ( 2)+EQ(3)+EQ(4)+4*(LONGST-LONG ))/60)
2095.     50 CONTINUE
2096.     U11=U1/CRATIO
2097.     U22=U2/CRATIO
2098.     XMINV=1/ (.008372*FLOWR*CP*DENS*CRATIO)
2099.     AREACR=AREAC/CRATIO
2100.     RRR=CELLL/COLEN
2101.     RETURN
2102.     %
2103.     % DAILY COMPUTATION BEGINS
2104.     %
2105.     ENTRY  COLLO1(K,TFLN,TFOUT,TA,QSR,ESR)
2106.     IF ((RADTH(K).LE.0).OR.(RADDN(K).LE.0)) GO To 38
```

```
      TAIR=TA-27 3
      I= (K-l)/24
      J-K-24*(I)
      I=I+I
      TD=J-0.5-SONOON(I)+DAYLEN(I)/2
      IF ((TD.LT. 0) .OR.(TD.GT.DAYLEN (I))) GO To 38
      COSINC=COS(DECL(I))
      RISANG=ACOS((-TANLAT)*TAN(DECL(I)))
      HRANG=(SONOON(I)-J)*RISANG/(DAYLEN(I)/2)
      IF(IEW.EQ.1)GO TO 350
      GO TO 360
      350   COSINC=(1-((COSINC) **Z)*((SIN(HRANG) )**2))**0.5
      %
      % COMPUTE SHADING
      z
      PHI=LAT-ATAN((TAN(DECL(I)))*(1./COS(HRANG)))
      THE=ACOS(COSINC)
      GO TO 370
      360   IF(ABS(HRANG).GT.PIE2/4)GO To 38
      PHI=HRANG
      THE=DECL(I)
      370   SHAD1=AMIN1(1,COSPAC*ABS(COS(PHI))/APWID)
      RADIUS=(2*FOCLEN)/(1.+COSRIM)
      SHAD2=FOCLEN+(((RADIUS*SINRIM)**2)/(12*FOCLEN))
      SHAD2=AMAX1(0, 1-((SHAD2*ABS(TAN(THE)))/COLEN))
      SHADTO=SHAD1*SHAD2
      %
      % COMPUTE THERMAL LOSSES
      z
      TRANSM=TRANS*(COSINC**0. 25)
      FCIONO=0
      IF  (SHAD2.GE.(RRR/2)+.5) %
         FCIONO=(CRATIO/COLEN)*CELLL*REFLEC*TRANSM*SHAD1*   %
                CELLEF*FC*RADDN(K)*COSINC
      762   IF ((SHAD2-.5)*COLEN.GE.CELLL/2) %
            ALPHIO=(CRATIO/COLEN)*REFLEC*SHAD1*TRANSM*RADDN(K)%
                  *COSINC*(ALPHA*(SHAD2*COLEN-FC*CELLL)+(FC*ELECAB*CELLL) )
      IF  ((SHAD2-0.5)*COLEN.LT.-CELLL/2) %
           ALPHIO=CRATIO*REFLEC*TRANSM*RADDN(K)   %
                 *COSINC*ALPHA*SHADTO
      IF (ABS((SHAD2-.5)*COLEN).LE.CELLL/2) %
            ALPHIO=(CRATIO/COLEN)*REFLEC*TRANSM*RADDN  (K)*  %
                   COSINC*(ALPHA*((COLEN-FC*CELLL)/2)+       %
                   FC*ELECAB*((SHAD2-0.5)*COLEN+CELLL/2))*SHAD1
      IF(ISYS.EQ.1)GO TO 7bl
      TTEMP=TFIN
      IF(IFLOW.EQ. 2)TTEMP=(TFIN+TFOUT)/2
      QL1=ALPHIO-FCIONO*(1-BETA*(TTEMP-28))
      IF(IFLOW.EQ.1)GO To 763
      %
      % CALCULATE ouTpuT FOR SYSTEM WITH FIXED ouTpuT TEMPERATURE
      %
      IF(TTEMP-TAIR.GE.T1-T0) %
           QL2=U11*CRATIO*(T1-T0)+U22*CRATIO*(TTEMP-TAIR-(T1-T0) )
      IF(TTEMP-TAIR.LT.T1-T0) %
           QL2=U11*CRATIO*(TTEMP-TAIR)
```

COLL2.PB-PNC/UGF002 08/17/78 14:47:14

```
      QSR=AREACR*(QL1-QL2)/(1-FCIONO*BETA/XKE)
      GO TO 764
      %
      Z CALCULATE OUTPUT FOR FIXED FLOW RATE
      %
      763   QL2=U11*CRATIO*(T1-T0)+U22*CRATIO*(TTEMP-TAIR-(T1-T0) )
      QSR=AREACR*(QL1-QL2)/(1+U22*XMINV-FCIONO*BETA*(1/XKE+XMINV/CRATIO))
      TTEMP=TFIN+QSR*XMINV/AREAC
      IF(TTEMP-TAIR.LT.T1-T0) %
      QSR=AREACR*(QL1-U11*CRATIO*(TFIN-TAIR))/(1+U11*XMINV-FCIONO%
           *BETA*(1/XKE+XMINV/CRATIO) )
      TTEMP=TFIN+QSR*XMINV/AREAC
      764 ESR=AREACR*FCIONO*(1-BETA*(TTEMP+QSR/(XKE*AREACR)-28))
      GO TO 766
      761 QSR=0
      ESR=AREACR*FCIONO*(1-BETA*(TAIR-28+ALPHIO/XKE))/(1-FCIONO*BETA/(XKE*FC ))
      766   QSR=AMAX1(0,QSR)
      ESR=AMAX1(0,ESR)
      RETURN
      38 QSR=0.
      ESR=0.
      RETURN
      %
      % OUTPUT STATEMENTS
      %
      ENTRY coLLo2
      IF (IEW.EQ.1) WRITE(13,1132)
      1132   FORMAT(' EAST-WEST AXIS TRACKING COLLECTOR')
      IF (IEW.NE.1) WRITE(13,459)
      459   FORMAT(' ONE-AXIS POLAR NORTH-SOUTH TRACKING COLLECTOR')
      IF(ISYS.EQ.1)     WRITE(13,451)
      451 FORMAT(1X, 'PASSIVE ELECTRIC-ONLY COLLECTOR')
      IF(ISYS.EQ.2)      WRITE(13,452)
      452 FORMAT(1X,'COMBINED THERMAL AND ELECTRIC COLLECTOR')
      IF(ISYS.EQ.3)     WRITE(13,453)
      453 FORMAT(1X,'THERMAL-ONLY COLLECTOR')
      IF(IFLOW.EQ.1) WRITE(13,455)
      455   FORMAT(' CONSTANT FLOW RATE')
      IF(IFLOW.EQ.2) WRITE(13,456)
      456   FORMAT(' CONSTANT OUTPUT TEMPERATURE')
      RETURN
      z
      Z OUTpUT SUMMARY
      z
      ENTRY COLL03
      LAT=LAT*PIEv
      RIMANG=RIMANG*PIEV
      WRITE(13,900) CRATIO,TRANS,AREAC,LAT,LONG,LONGST,U1 ,%
                    U2,XKE,BETA,CELLEF,ELECAB,FC ,%
                    ALPHA,FLoWR,DENS,CP,TO,T1 ,APWID,COLEN,%
                    FOCLEN,COSPAC,RIMANG,REFLEC,CELLL
      WRITE(13,901) ISYS,IFLOW,IEW
      RETURN
      END
```

COLL3. PB-PNC/UGF002 08/17/78 14:48:14

```
1.        % PROGRAM NAME: COLL3.JB
2.        % JOHN C. BELL
3.        % ENERGY PROGRAM
4.        % OFFICE OF TECHNOLOGY ASSESSMENT
5.        % COMPILED
6.        %     DATE: 12/29/77
7.        %     TIME: 12:29:42
8.        % PROGRAM COLL3.JB FOR RUNNING HELIOSTAT FIELDS
9.        z         WITH THERMAL OUTPUT ONLY
10.       %
11.       %
1.2.      %
13.       %
2000.     SUBROUTINE COLL(ISYS1)
2001.     DIMENSION DAYLEN(365),SONOON(365) ,DECL(365)
2002.     DIMENSION RADDN(8760),RADTH(8760)
2003.     DIMENSION EQ(4),A(4),B(4)
2004.     IMPLICIT  REAL(L)
2005.     COMMON/BXXX/CRATIO,TRANS ,AREAC,LAT,LONG,LONGST,TILT,AZ ,XKE,BETA,%
2006.                 CELLEF,ELECAB,FC,ULOSS,COVERN,FR,ALPHA,FLOWR,DENS,CP,%
2007.                 ABC,ABD,APWID,COLEN,FOCLEN,COSPAC.RIMANG.REFLEC ,CELLL,%
2008.                 ALPHAV,YYY(5),ISYS,IFLOW,   IEW,IYYY(5)
2009.     DIMENSION  SCEL(37),ISCEL(8)
2010.     EquiValence  (SCEL(1),CRATIO) ,(ISCEL(1),ISYS)
2011.     DATA A,B/-.2E-3,  .4197,-.32265E 1,-.903E-1,0. ,-.7351E1,-.93912E1,-.3661 /
2012.     DIMENSION  GAMMA(3,  7),DAYTIM(3,  7),NZDAY(365)
2013.     DATA  GAMMA/.92,.56,0.,.92, .58, 0., .92, .68,0.,.91,.72,0.,.87,.7,0.,.82,
                  .58,0. ,. 78,  .49,0./
2014.     DATA DAYTIM/ 1.7,5.36,7. 18,1.7,5.1,6.96,  1.7,3.93,6.56,  1.48,3.6,6.03,  1.51,
                  3.48,5.57,1.74,3.6,5.17    ,1.39,3.6,4.781
2015.     DATA NZDAY/4*7,  31*6,30*5,31*4,   30*3,31*2,29*1,31*2,30*3,   31*4,30*5,31*6,26*7/
2016.     PIE2=6.2831853
2017.     PIEV=360/(PIE2)
2018.     READ(24) DECL
2019.     REWIND 25
2020.     READ(25)  RADDN,RADDN,RADDN,RADTH
2021.     READ(12,*,PROMPT='FILE NUMBER FOR COLLECTOR COEFFICIENTS: ') IF
2022.     IF (IF.LE.0) GO TO 1120
2023.     REWIND IF
2024.     READ(IF) SCEL,ISCEL
2025.     1120   READ(12,99,PROMPT='LIST/CHANGE VARIABLES AND VALUES: ') ITST
2026.     99   FORMAT(A4)
2027.     IF (ITST.EQ. 'YES')  GO To 1123
2028.     IF (ITST.EQ.'NO') GO TO 1124
2029.     IF (ITST.EQ. 'NON') GO TO 1140
2030.     GO TO 1120
2031.     1123   WRITE(13,900)  CRATIO,AREAC,LAT,LONG,LONGST,ULOSS,  %
2032.                           ALPHA,REFLEC
2033.     900   FORMAT('  _______REAL  NUMBERS_________'/%
2034.        ' #',4X,'VALUE' ,4x,'Definition '/z
2035.       ' 1 ',1PE1O.3,'  :CONCENTRATION RATIO (DIM)"/%
2036.        ' 3 ',1PE10.3,'  :COLLECTOR AREA (M**2)'/%
2037.        ' 4 ',1PE10.3,  ' :LATITUDE (DEG)'/%
2038.        ' 5", IPE10.3,'  :LONGITUDE (DEG)'/%
2039.        ' 6', 1PE10.3, '  :STANDARD LONGITUDE (DEG)'/%
2040.       ' 14 ',IPE10.3, '  :THERMAL LOSS COEFF (KW/C*M**2)'/%
2041.       ' 17 ',1PE10.3,' :ABSORB OF THERMAL-ONLY SURFACES (.LE.1.00)'/%
2042.       ' 28 ', 1PE10.3,'  :COLLECTOR REFLECTIVITY (.LE. 1.00)')
2043.     1124   READ(12,*,PROMPT='VAR # AND VARIABLE: ') IV,V
2044.     IF (IV.LE.0) GO TO 1126
2045.     IF (IV.GT.37) GO TO 1124
```

COLL3.PB-PNC/UGF002 08/17/78 14:48:14

```
2046.     SCEL(IV)=V
2047.     GO TO 1124
20.48.    1126   READ(12,*,PROMPT='FILE NUMBER TO STORE COLLECTOR COEFF: ') IV
2049.     IF (IV.LE.0) GO TO 1140
2050.     REWIND IV
2051.     WRITE(IV) SCEL,ISCEL
2052.     %
2053.     % FINISH INITIAL COMPUTATIONS
2054.     %
2055.     1140 LAT=LAT/PIEV
2056.     TANLAT=TAN(LAT)
2057.     ISYS1=ISYS
2058.     DO 50 1-1,365,1
2059.     DO 2500 J-1,4
2060.     EQ(J)=A(J)*COS ((PIE2* (J-1)*1)/365. 25)+B(J)*SIN( (PIE2*(J-1 )*1)/365.25)
2061.     2500   CONTINUE
2062.     RISANG=ACOS((-TANLAT)*TAN (DECL(I)))
2063.     DAYLEN(I)=PIEV*RISANG/7.5
2064.     SONOON(I)=13.5-((EQ(1)+EQ(2)+EQ( 3)+EQ(4)+4*(LoNGsT-LoNG)  )/60)
2065.     50 CONTINUE
2066.     RETURN
2067.     %
2068.     % DAILY COMPUTATION BEGINS
2069.     %
2070.     ENTRY  COLLO1(K,TFIN,TFOUT,TA,QSR,ESR)
2071.     IF ((RADTH(K).LE.0).OR.(RADDN(K).LE.0)) GO T O  38
2072.     TFIN=TFOUT
2073.     TAIR=TA-273
2074.     I=(K-1)/24
2075.     J=K-24*(I)
2076.     I=I+1
2077.     N=NZDAY(I)
2078.     TD=J-0.5-SONOON(I)+DAYLEN (1)/2
2079.     IF ((TD.LT.0).OR. (TD.GT.DAYLEN(I))) GO TO 38
2080.     TDAY=ABS (SONOON(I)-J)
2081.     TD=DAYLEN(I)/2.
2082.     TB=(TD/(DAYTIM(3,N)))*DAYTIM(1,N)
2083.     TC=(TD/(DAYTIM(3,N) ))*DAYTIM(2,N )
2084.     IF(TDAY.LT.TB)GO TO 25
2085.     IF(TDAY.LE.TC)GO TO 26
2086.     GO TO 27
2087.     25   GAMCOS=0
2088.     GO TO 30
2089.     26   GAMCOS=(GAMMA(1,N)-GAMMA( 2,N))/(TC-TB)
2090.     TD=TB
2091.     GO TO 30
2092.     27   GAMCOS=(GAMMA(2,N)-GAMMA(3 ,N))/(TD-TC)-  %
2093.                (GAMMA(2,N)-GAMMA(1,N)) /(TDAY-TC) @correction FACTOR
209.4.    TD=TC
2095.     30   GAMCOS=GAMMA( 1,N)-GAMCOS*(TDAY-TD)
2096.     QSR=REFLEC*ALPHA*AREAC*GAMCOS*M.DDN  (K)- %
2097.          (TFOUT-TAIR)*ULOSS*AREAC/CRATIO
2098.     GO TO 39
2099.     38 QSR=0.
2100.     39 IF(QSR.LE.0) QSR=0.
2101.     RETURN
2102.     %
2103.     % OUTPUT STATEMENTS
2104.     z
2105.     ENTRY COLL02
2106.     WRITE(13,250)
```

```
250   FORMAT (' HELIOSTAT FIELD' )
      RETURN
      Z
      % OUTPU 1 SUMMARY
      %
      ENTRY COLL03
```



```
      LAT=LAT*PIEV
      WRITE(13,900) CRATIO,AREAC,LAT,LONG,  LONGST,ULOSS, Z
                    ALPHA,REFLEC
      RETURN
      END
```

OFFPK.PB-PNC/UGF002 08117178 14:45:20

```
%PROGRAM NAME OFFPK.JB
% JOHN C. BELL
Z ENERGY PROGRAM
%OFFICE OF TECHNOLOGY ASSESSMENT
%COMPILED
Z      DATE:   3/25/78
Z      TIME: 15:30:21
% PROGRAM OFFPK.JB FOR BUYING OFFPEAK ELECTRICITY
%
%
%
Z
%
Z
%
SUBROUTINE OFFPK
DIMENSION E(8760),CPC(2,25)
COMMON/DXXX/BOLMAX,CPC
COMMON/EXXX/TAIRF
COMMON/XDATA/E
DATA XMAX,ONE/1.0E10, 1./
READ(12, 99,PROMPT='HEATING, COOLING, AND HOT WATER: ') ITST
99   FORMAT(A4)
IF (ITST.EQ.'YES') IHC=1
READ(12,*,PROMPT='OFFPEAK CHARGING HOURS--BEGIN AND END: ') IHRB,IHRE
IHRTOT=IHRE-IHRB+1
RETURN
ENTRY OFFPK1(K,QP,QC,QSH,COPEE, EHWEFF)
IHR=K-((K-1 )/24)*24
IF ((IHR.GE.IHRB) .AND. (IHR.LE.IHRE)) GO TO 200
H2ON=H2ON+QP
CALL UPDATE(XMAX,WSTOR,-QP,RESID,ONE,ONE,XMAX)
E(K)=E(K)-(QP-RESID)/EHWEFF
IF (QSH.GT.0) GO TO 100
HEATN=HEATN+QC
CALL UPDATE(XMAX,HSTOR,-QC,RESLD,ONE,ONE,XMAX)
CO TO 101
100   IF (IHC.NE.1) RETURN
COOLN=COOLN+QC
```

OFFPK. PB-PNC/UGF002 08/17/78 14:45:20

```
CALL UPDATE(XMAX,CSTOR,-QC,RESID,ONE,ONE,XMAX)
101   RESID=(QC-RESID)/COPEE
E(K)=E(K)-RESID
QC2=QC2+RESID
QC1=QC1-RESID
RETURN
200   IF (IHR.NE.IHRB) CO TO 250
OFFBYH=AMAX1(0,(HEATN-HSTOR)/IHRTOT)
OFFBYC=AMAX1(0,(COOLN-CSTOR)/IHRTOT)
OFFBYW=AMAX1(0,(H2ON-WSTOR)/IHRTOT)
HEATN=0
COOLN=0
H2ON=0
250   E(K)=E(K)+OFFBYW/EHWEFF+OFFBYH
IF (IHC.NE.1) GO TO 275
CALL COPT(TAIRF,CPC,COPC)
E(K)=E(K)+OFFBYC/COPC
CSTOR=CSTOR+OFFBYC
TOFFPC=TOFFPC+OFFBYC/COPC
275   HSTOR=HSTOR+OFFBYH
TOFFPH=TOFFPH+OFFBYH
WSTOR=WSTOR+OFFBYW
TOFFPW=TOFFPW+OFFBYW/EHWEFF
IF (IHR.NE.IHRE) RETURN
HSTORM=AMAX1(HSTOR,HSTORM)
CSTORM=AMAXI  (CSTORM,CSTOR)
WSTORM=AMAX1  (WSTORM,WSTOR)
RETURN
ENTRY OFFPK2
IF (IHC.EQ.1) WRITE(13,7)
7   FORMAT(//' OFFPEAK BUYING FOR HEATING,COOLING, AND HOT WATER')
IF (IHC.NE.1) WRITE(13,8)
8   FORMAT(//' OFFPEAK BUYING FOR HEATING AND HOT WATER')
WRITE(13,9)  HSTORM,TOFFPH,CSTORM,TOFFPC,WSTORM,TOFFPW
9   FORMAT( 15X, 'MAXIMUM' ,5x, 'TOTAL'/15X,'STORAGE' ,2x,'Electricity"/%
     ' HEATING:',4X,2(1PE10.3,2X)/' COOLING: ',4X,2(1PE10. 3,2x)/%
     ' HOT WATER:   ',2(1PE10.3,2X))
RETURN
END
```

Chapter IV

RESULTS OF SYSTEMS ANALYSIS

Chapter IV.—RESULTS OF SYSTEMS ANALYSIS

Page

A Guide to the Tables 96
The Summary Tables 99
The Catlog of Energy Systems. 147
Single Family Homes
Albluquerqe. 148
....201
Fort Worth 239
Omaha 268
High Rise Apartments
Albuquerque 350
Boston .....*. 396
Fort Worth . . . .* 410
Omaha 423

page

Shopping Centers
Albuquerque 510
Fort Worth 531
Omaha.. 645

Communities
Albuquerque .. ..; 677
Fort Worth 694
Omaha. .. . .,. 601

Industrial Buildings
Albuquerque . . . . . .,..,....., . 616
Omaha . . . . . .9 .....9.....637

Chapter IV
Results of Systems Analysis

The tables, which constitute the bulk of this chapter, provide detailed information about a number of integrated solar energy systems designed to meet the energy needs of single family houses, apartment buildings, shopping malls, communities, and industrial plants located in Albuquerque, N. Mex.; Boston, Mass.; Fort Worth, Tex.; and Omaha, Nebr. This extensive catalog was prepared to compare, on an equitable basis, the performance of the enormous variety of systems that are capable of meeting the energy requirements of these buildings and communities. The examples have been chosen to indicate the relative attractiveness of a number of different system components, which may become available during the next decade, and to indicate the facility with which different combinations of components work together as integrated systems.

This chapter is divided into two major parts:

1. A summary table giving the monthly costs for each system analyzed and the effective cost of solar energy generated by each system (this table also serves as an index to the catalog tables, which provide details about each system); and
2. A catalog of solar energy systems which devotes one page to each system, summarizing the assumptions made in analyzing its performance.

Chapter I of this report discusses the methods used to evaluate the economic parameters illustrated in the tables. It provides a simple technique for performing an accurate life-cycle cost analysis of energy systems that may be owned by any of several different types of owners. It also discusses the origin of the assumptions made about the financing and tax status of each type of owner. The methodology and data described in this chapter are used in a computer program that calculates the levelized monthly costs for each system; supplies information about the first costs, operating costs, and lifetimes of the system components; the fossil and electrical energy purchased; the assumed escalation rate of energy prices; and the type of owner.

Chapter II discusses the assumptions made about current and future prices of oil, gas, coal, and electricity. It provides information about the price charged for energy now on the market, the marginal cost of new energy sources, the cost of energy from sources likely to be available by the year 2000, and the time over which a transition from one source to another is likely to occur. A simple mathematical method is presented that can translate differing estimates about future energy sources and costs into a forecast of prices that can be used in life-cycle cost analysis,

Chapter III discusses the computer programs that compute the amount of fuel and electricity that must be purchased annually to meet the energy needs of the building or community. These programs compute the amount of energy that can be provided by any solar energy system used; the purchased energy is the difference between onsite demands and available onsite solar energy.

Chapter V discusses the assumptions made about the cost and performance of each subsystem used in the analysis and provides detailed information about the buildings being analyzed and assumptions made about the energy consumed by the buildings.

An attempt was made to reduce the results of the somewhat complex analysis presented in this report to a set of simple, easily interpretable numbers—a monthly energy bill and an effective solar energy cost in ¢/kWh.

A GUIDE TO THE TABLES

Two types of numbers are provided to represent the costs of the systems examined: 1) a set of levelized monthly costs perceived by the energy consumer, with various assumptions about tax credits given and the price of nonsolar energy, and 2) a cost in ¢/kWh of solar energy (or energy conservation) obtained by comparing it with a "reference system. " The reference system represents a conventional energy system operating in a building identical to the one used to analyze the performance of the solar or energy conservation system. An attempt is made to choose a reference system that most nearly resembles the system used to provide backup energy for the solar energy device.

THE SUMMARY TABLES

The summary tables provide the following information about each system examined:

- A brief descriptive title and an identifying number.
- The percentage of the energy used by the reference system that is supplied by the solar energy system. If an energy conservation device is employed that does not use solar energy, this number represents the percentage energy saving. The formula for this percentage (P_s) is as follows:

$$P_s = 100 \frac{E_r - E_t}{E_r}$$

subscript "r" refers to the reference system, subscript "t" refers to the test system, i.e., the system being compared with the reference system.

- The effective cost of solar energy with and without an investment tax credit. (When a conservation system is shown which does not use solar energy, this cost reflects the effective cost of saving energy using the conservation device.) In some cases, the life-cycle cost of the energy conservation system (excluding the cost of energy purchased) is actually lower than the life-cycle cost of the reference system (excluding the cost of energy purchased) resulting in a situation where the effective cost of the energy conserved is negative.

The formula for effective energy cost (EC) is as follows:

$$EC = \frac{C_r + OM_r + CR_r - C_t - OM_t - CR_t}{E_r - E_t}$$

C = levelized annual capital costs (including financing charges, taxes, and insurance)

OM = levelized annual operating and maintenance costs (excluding purchases of electricity and fuels)

CR = levelized cost of replacements

- The levelized monthly energy costs for the set of owner types described below make four different assumptions about the kinds of tax credits given and the cost of conventional energy.

- A table number that indicates the number of the table in the catalog which describes the system in more detail. When a single number appears in this column, the catalog page corresponds exactly to the summary case. When two numbers appear, the first table number shown describes an identical system, but some of the costs (usually collector costs) shown in the table are not the same as those used to compute the costs shown in the summary table. The second catalog page referenced describes a slightly different system (e. g., it might have a different Collector area), but the unit costs of the components are the same as those used to compute

the costs shown on the line in the summary table, (This method was used to minimize the number of catalog pages.) When the letter "G" appears with a table number, the catalog page referenced describes an identical system which assumes oil fuel prices while the costs shown in the summary table assure that gas was the fuel used. When the letter "M" appears with a table number in the summary table the catalog page referenced describes an identical system owned by an industrial corporation, while the summary table shows the economics for municipal utility ownership. When the letter "T" appears with a table number, the catalog page referenced describes an identical system with ordinary electric rates while the costs shown in the summary table assume that marginal or "time-of-day" rates are charged.

The tables indicate the costs resulting from financing by a homeowner (for single family houses), by a real estate partnership (for apartments and shopping malls), by a municipal utility (for community systems and industries), and by an industrial corporation requiring a 20-percent return on investments (for industries).

Each of these costs is paired with a cost that would result if the additional solar or conservation equipment were owned instead by a privately owned utility. Here, it is assumed that the owner other than the private utility owns a share equal in value to the cost of the reference energy system (i. e., the backup system, in most cases).

THE CATALOG OF ENERGY SYSTEMS

Each page of the catalog is devoted to a single energy system designed to serve the building and the city indicated. The pages are divided into three parts:

- A drawing of the building giving a rough indication of the external appearance of the system.
- An energy flow-diagram indicating the way i n which Collectors, storage devices, engines, and energy-consuming devices are combined to meet the energy demands of the buildings.
- A set of three tables providing details about the costs and performance assumed for the system.
  - Table *A* provides an itemized cost list of all components used in the system. it includes an estimate of the first cost, the annual operating and maintenance costs (exclusive of purchased energy) which are charged during the first year of the systems operation, and the expected lifetime of the component (rounded to 10, 15, or 30 years).

    The second part of the table indicates the amount of nonsolar energy (*electricity* or fossil fuel) that was purchased to provide backup for the solar energy system. In the case of electricity the amount shown is the difference between the amount purchased from an electric utility and the amount sent from the onsite generating equipment back into the electric grid for possible purchase by the utility. The peak amount of electricity purchased during any hour of the year is also shown.
  - Table *B* provides estimates of the levelized monthly costs for a system that begins operation in 1976, and also for a similar system that would begin operations in 1985. The only difference between the 1976 cases and the 1985 cases is that the conventional energy prices in the 1985 cases have escalated to a higher level by the startup date, as shown in chapter II. For ease of comparison with the 1976 cases, prices have not been inflated between 1976 and 1985 for the 1985 cases (i.e., all cases start in 1976 dollars, and cost inflate at 5.5 percent in each succeeding year). With the advanced solar energy systems, the 1976 costs are shown only for reference purposes; they are not meant to suggest that al l technologies examined were available in 1976. The lev-

elized cost of the reference system is also shown for comparison.

The costs achieved with a 20-percent investment tax credit (ITC) could also be reached with low interest loans and other incentives. The table below shows the interest rate of a loan which would result in the same annual capital costs (k_1) as a 20-percent ITC.

The costs achieved with "full incentives" assumed a combination of 20-percent investment tax credit, 3-year straight-line depreciation, and exemption from property taxes. These cost reductions could also be reached with tax credits or other incentives.

Owner	k, 20% ITC	Loan interest (baseline fraction financed)	Loan interest (95% financed)
Homeowner, new construction	0075	0.033	0.065
Homeowner, retrofit	0.092	0.048	0.043
Real estate owner	0.067	0.019	0.070
Industry (20% IRR)	*0.239*	—	*0.274*
Municipal utility .	*0081*	0.041	0.041
Private utility	*0.126*	0.066	0.045

Owner	k_1 Full incentives	Equivalent ITC (%)
Homeowner, new construction	0.031	65
Homeowner, retrofit	**0,048**	**65**
Real estate owner	0.022	43
Industry (20% IRR)	0.111	58
Municipal utility	*0.061*	50
Private utility, ...	0.071	53

– Table C provides an estimate of the effective cost of solar (or conservation) energy computed using the technique described in the description of the summary tables. The cost of conventional electricity and fuels levelized over the same time interval are provided for comparison.

SUMMARY TABLE LISTING

Summary description of system	Table number	Percent solar	Effective cost of solar energy (¢/kWh)		Levelized monthly cost of energy service			
			No credits	20% ITC	Project Ion 1 No credits	Project Ion 2 No credits	Projection 2 20°A ITC	Projection 3 20% ITC
ALBUQUERQUE SINGLE FAMILY								
Reference **system**								
Conv. Gas Heat, Gas Hot Water, and Central Electric A/C (SF-1)	1	**0.0**	NA/ NA	NA/ NA	116. / NA	173. / NA	173. / NA	287./ NA
Systems compared to reference system								
Conv. *Improved Gas Heat, Hot Water, and Central Electric A/C.*	2	11.9	71/ 5.81	.62/ 5.73	111,1 123.	160,/ 172.	159. / 172.	265./ 278.
Conv. Insulated House; Gas Heat and Hot Water and Central Electric A/C	3	168	.26/ 3.98	.02/ 3.77	106. / 119.	153. / 166.	152, / 165.	253./ 266.
Solar Hot Water; Flat-Plates (1977 Prices); SF-1	4	15.9	6.1 9/ 2.61	5.22/ 11.78	127. / 148.	1 73./ 195.	170. / 192.	273./ 295.
Solar Hot Water; Flat-Plates (Future Price); SF-1	5	15.9	4.45/ 0.04	3.75/ 9.44	121. / 140,	167./ 186.	165. / 184.	268. / 287.
Solar Heating; Flat-Plates (1977 Prices), Low- **Temp.** *Storage; SF-1*	6	41.0	9.47/ 15.25	8.02/ 14.01	172./ 222,	201. / 251.	188. / 240.	276.1 328.
Solar *Heating; Flat-Plates (Future Price), Low-Temp. Storage; SF-1*	7	41.0	6.12/ 10.34	5.18/ 9.53	143./ 179.	172. / 208.	164. / 201.	251. / 289.
Reference system								
Conv. Oil Heating and Central Electric A/C (SF-5)	8	0.0	NA/ NA	NA/ NA	179. / NA	230./ NA	230./ NA	458. / NA
Systems **compared to reference system**								
Conv. Improved Oil Heating and Central Electric A/C (SF-5)	9	11.5	.63/ 5.94	.55/ 5.87	163. / 178.	208./ 223.	208./ 223.	406. / 421.
Conv. Insulated House; Oil Heating and Central Electric A/C (IF-5)	10	18.5	-.10/ 3.16	-.25/ 3.03	153./ 167.	1 95. / 209.	194. / 209.	379. / 393.
Solar Hot Water; Flat-Plates (1977 Prices); SF-5	11	18.0	4.76/ 10.17	4.01/ 9.53	173./ 197.	216./ 239.	212./ 236.	396./ 420.
Solar Hot Water; Flat-plates (Future Price); SF-5	1 1/135	18.0	3.42/ 8.19	2.88/ 7.73	168. / 188.	210./ 230.	207./ 228.	392. / 413.
Solar Heating; Flat-Plates (1977 Prices); Low-Temp. Storage; SF-5	12	45,4	7.46/ 12.20	6.32/ 11.22	194./ 246.	222./ 274.	209./ 263.	326. / 380.
Solar Heating; Flat-Plates (Future Price), Low-Temp. Storage; SF-5	1 2/137	45.4	4.82/ 8.33	4.08/ 7.69	165./ 204.	193./ 231.	185./ 224.	302. / 341,

Summary description of system	Table number	Percent solar	Effective cost of solar energy (¢/kWh)		Levelized monthly cost of energy service			
			No credits	20% ITC	Project Ion 1 No credits	Project ion 2 No credits	Project Ion 2 20%ITC	Projection 3 20% ITC
Reference system								
Conv. Gas Heat, Hot Water, and Absorption A/C (IF-7)	13	0.0	NA/ NA	NA/ NA	122./ NA	187. / NA	187. / NA	295./ NA
Systems compared to reference system								
Solar Heating and Cooling; Flat-Plates (1977 Prices); Low-Temp. Storage; SF-7	14	56.2	6.55/ 10.87	5.55/ 10.01	165./ 219.	190. / 244.	178./ 233.	248./ 304.
Solar Heating and Cooling; Fiat-Plates (Future Price), Low-Temp. Storage; SF-7	15	56.2	4.24/ 7.48	3.59/ 6.93	137. / 177.	161./ 202.	153, / 195.	224. / 265.
Reference system								
Conv. Insulated House; Gas Heat, Hot Water, and Absorption A/C (1 F-7)	16	0.0	NA/ NA	NA/ NA	110. / NA	163. / NA	163. / NA	260./ NA
Systems compared to reference system								
Solar Engine Cogeneration, Insulated House; ORCS With Cooling Tower, One-Axis Tracker (Future Design), Low-Temp. Storage; IF-7.	17	42.2	14.66/ 22.99	12.71 / 21.32	184. / 249.	218./ 283.	203./ 270.	235./ 302.
Solar Engine Cogeneration, Insulated House; ORCS With Cooling Tower, One-Axis Tracker (Future Design), High-Temp. Storage, Gas Backup; IF-7	18	67.8	10.26/ 15.99	8.84/ 14.77	183./ 255.	203./ 275.	185. / 259.	203. / 277.
Solar Engine Cogeneration, Insulated House; ORCS With Cooling Tower, One-Axis Tracker (Future Design), Battery and High-Temp. Storage, Gas Backup; IF-7	19	63.7	12.75/ 19.52	11.02/ 18.05	207./ 287.	229./ 309.	209. / 291.	229. / 312.
Conv. Engine Cogeneration, insulated House; Stirling Engine (Low Eff.) Direct-Drive Heat Pump, Gas Hot Water; IF-9.	20	45.6	5.45/ 8.28	5.23/ 8.09	113. / 137.	146. / 170.	144./ 168.	174. / 198.
Reference system								
Conv. System, All **Electric; Heat Pump (SF-1).**	21	0.0	NA/ NA	NA/ NA	156. / NA	203. / NA	203./ NA	395./ NA
Systems compared to reference system								
Conv. System, All Electric; Improved Heat Pump (High Price) (SF-2).	22	14.5	5.27/ 10.32	4.78/ 9.91	162. / 181.	203./ 222.	201./ 221.	367./ 387.
Conv. System, All Electric; Improved Heat Pump (Low Price) (SF-2)	23	14.5	1.34/ 4.97	1.22/ 4.87	46. / 160.	187. / 201.	187. / 201.	353./ 367.
Solar Hot Water; Flat-Plates (1977 Prices); SF-2	24	28.4	2.67/ 5,51	2.25/ 5.15	47,/ 169.	182. / 204.	179. / 201.	321./ 343.
Solar Hot Water; Flat-Plates (Future Price); SF-2	24/1 50	28.4	1.91 / 4.39	1.61/ 4.13	41./ 160.	176. / 195.	174. / 193.	316./ 336.

Systems compared to reference system—Continued								
Solar Heating; Flat-Plates (1977 Prices), Low-Temp. Storage; SF-2 ...	25	37.0	5.22/ 883	4 43/ 816	170 / 206.	201 I 237	193. / 230.	321 ./ 358
Solar Heating; Flat-Plates (1977 Prices); SF-2	26	41.4	5 32/ 886	451 / 817	172 I 212.	202. / 241.	193. I 234.	313. / 354.
Solar Heating; Flat-Plates (Future Price); SF-2	26/1 54	414	3 53/ 624	2.98/ 578	152. I 183	182 / 212	176. / 207	295 I 327
Solar Heating; Flat-Plates (1977 Prices), Low-Temp. Storage; SF-2 ...	27	48.4	6.22/ 10.04	5 26/ 9.23	187 / 237.	213 / 263	201. / 253.	309. / 361
Solar Heating; Flat-Plates (Future Price), Low-Temp. Storage; SF-2	27/154	484	4.02/ 682	3.40/ 6.29	158 / 195.	184 / 221	176 / 214	284. / 322.
100-Percent Solar Heating; Flat-Plates (1977 Prices), Community Seasonal Low-Temp. Storage; SF-2	28	65.4	7.17/ 11 20	5.90/ 10.12	214. / 286.	234. / 305	211 / 286.	290 I 364
100-Percent Solar Heating; Flat-Plates (Future Price), Community Seasonal Storage; SF-2	29	65.4	4.36/ 7.00	3.62/ 6.37	165. / 211.	184. / 231	171 / 219	249./ 298
PV System; Air-Cooled Si Arrays ($0.50/W); SF-2	30	85.6	5.291 8.31	4.44/ 7,59	213./ 284.	234. / 304.	215 I 288.	299. / 372
PV System; Air-Cooled Thin-Film Arrays ($0.10/W); SF-2	31	59.9	2 .05/ 3.78	1.72/ 3.50	141 ./ 169.	169. / 197.	163. / 192.	276./ 305.
PV Cogeneration: One-Axis Concentrator With Si Cells ($15/W Cells), Multitank Low-Temp. Storage; SF-2	32	92.7	11 .66/ 17.65	9.81 / 16.08	358. / 508.	368. / 519.	322. / 479.	364 / 521.
Reference system								
Conv. Insulated All Electrlc House; Heat Pump (IF-2)	33	0.0	NA/ NA	NA/ NA	142. / NA	183. / NA	183. / NA	350./ NA
Systems compared to reference system								
PV System, Insulated House; Air-Cooled Si Arrays ($1/W); IF-2	34/1 71	51.9	9.68/ 15.33	8.15/ 14.03	222./ 291.	249./ 317.	230./ 302.	338./ 409.
PV System, Insulated House; Air-Cooled Si Arrays ($0.50/W); IF-2.	34	51.9	5.37/ 9.00	4.53/ 8.28	170. / 214.	197. / 241.	187./ 232.	294./ 340.
PV System; Air-Cooled Si Arrays ($0.50/W), Battery Storage; IF-2	35	45.2	8.50/ 13.49	7.32/ 12.49	190. / 243.	215./ 267.	202. / 257.	303./ 357.
PV System, Insulated House; Air-Cooled Si Arrays ($0.50/w); Improved IF-2	36	61.2	4.78/ 7.94	4.04/ 7.31	165. / 210.	188./ 233.	178. / 224.	272. / 319,
PV System, Insulated House; Air-Cooled Thin-Film Arrays ($0.30/W); IF-2	37	29.1	4.24/ 8.23	3.55/ 7.64	148./ 175.	180./ 207.	175. / 203.	306./ 333.
PV System, Insulated House; Air-Cooled Thin-Film Arrays ($0.10W); IF-2	38	37.5	2.05/ 4.58	1.71 / 4.29	132./ 154.	162./ 184.	159. / 181.	281./ 303.
PV System, Insulated House; Air-Cooled Thin-Film Arrays ($0.10IW); Improved SF-2.	39	46,2	1.99/ 415	1.69/ 3.89	127. / 151.	154./ 177.	151. / 175.	260./ 283.
PV Cogeneration, Insulated House; One-Axis Concentrator With Si Cells ($15i/W) Cells), Multitank Low-Temp. Storage; IF-2.	40	76.7	8.95/ 13.89	7.55/ 12.69	235./ 323.	249. / 337.	224./ 316.	282. / 374.
PV Cogeneration, Insulated House; Plastic Dye PV Concentrator, Multitank Low-Temp. Storage; IF-2.	41	100.8	2.63/ 4.41	2.21 / 4.05	124. / 166.	1 33./ 175	123. / 166	160. / 203
PV System, Insulated House; Plastic Dye PV Concentrator With Passive Cooling; IF-2.	42	90.0	2.36/ 4.12	1.98/ 3.80	1 33./ 170.	150. / 187.	142. / 181.	214. / 252.

Summary description of system	Table number	Percent solar	Effective cost of solar energy (¢/kWh)		Levelized monthly cost of energy service			
			No credits	200/0 ITC	Project Ion 1 No credits	Projection 2 No credits	Projection 2 20% ITC	Projection 3 20% ITC
Systems compared to reference system—Continued								
PV System, Insulated House; Air-Cooled Si Arrays ($0.50/W), Low-Temp. Storage; Improved IF-2	43	73.9	5.75/ 8.87	5.02/ 8.24	157. / 211.	177. / 231.	164./ 220.	182./ 238.
Reference system								
Conv. All Electric House; Resistance Heat and Window A/C (SF-3)	44	0.0	NA/ NA	NA/ NA	177./ NA	238. / NA	238./ NA	490./ NA
Systems compared to reference system								
Conv. All Electric House; Resistance Heat and Window A/C, 65/85 Thermostat (SF-3)	45	4.2	-.00/ 5.27	-.00/ 5.27	171 ./ 179.	230./ 238.	230./ 238.	472./ 480.
Conv. Insulated All Electric House; Resistance Heat and Window A/C (IF-3)	48	21.5	.37/ 1.63	.251 1.53	149./ 159.	198./ 208.	197./ 207.	399./ 409.
Solar Heating; Flat-Plates (Future Price), Low-Temp. Storage; SF-4	49	47.0	3.47/ 5.54	2.94/ 5.09	169./ 205.	204./ 240.	195. / 232.	337./ 374.
Solar Heating; Flat-Plates (Future Price), Low-Temp. Storage; SF-4	491192	47.0	2.31/ 3.83	1.95/ 3.53	149./ 176.	184./ 211.	178. / 205.	320. / 347.
Solar Heating; Flat-Plates (1977 Prices), Low-Temp. Storage; SF-4	52	56.2	3.98/ 6.23	3.37/ 5.70	179./ 224.	208./ 254.	196./ 243.	317. / 364.
Solar Heating; Flat-Plates (Future Price), Low-Temp. Storage; SF-4	53	67.2	2.83/ 4.48	2.39/ 4.11	151./ 191.	174. / 215.	163./ 205.	259./ 301.
ALBUQUERQUE SINGLE FAMILY TIME-OF-DAY RATES								
Reference system								
Conv. All Electric House (SF-3); Marginal Electric Rates	T44	0.0	NA/ NA	NA/ NA	241./ - NA	241./ NA	241./ NA	241./ NA
Systems *compared to reference system*								
Conv. Off-Peak Electric Heating; Window A/C, Low-Temp. Storage (SF-4)	46	-.6	-96.34/ •*****	-75.80/ •*****	183./ 204.	183./ 204.	1 79./ 200.	179./ 200.
Conv. Off-Peak Electric Heating and Cooling System; Central Electric Chilling, Low-Temp. Thermal and Cold Storage (SF-4)	47	-.1	● *****, •*****	● *****/ •*****	197./ 232.	197./ 232.	188./ 225.	188./ 225.
Solar Off-Peak Heating; Flat-Plates (1977 Prices), Low-Temp. Storage; SF-4	50	46.7	4,06/ 6.42	3.42/ 5.87	196./ 236.	196,/ 236.	185./ 227,	185./ 227.
Solar Off-Peak Heating; Flat-Plates (Future Price), Low-Temp. Storage; SF-4	50/194	46.7	2.88/ 4.70	2.42/ 4.31	176./ 207.	176./ 207.	168./ 200.	168./ 200.
Solar Off-Peak Heating and Cooling; Flat-Plates (1977 Prices), Low-Temp. Storage; SF-4	51	47.2	6.28/ 9.69	5.33/ 8.89	212./ 271.	212./ 271.	196./ 258.	196./ 258.
Solar Off-Peak Heating and Cooling; Flat-Plates (Future Price), Low-Temp. Storage; SF-4	51/196	47.2	5,12/ 8.00	4.35/ 7.34	192./ 242.	192./ 242.	179./ 231.	179./ 231.

BOSTON SINGLE FAMILY																
Reference system																
Conv. Gas Heat, Hot Water, and Central Electric A/C (SF-1). . . . . , .	54	0.0	NAI	NA	NAI	NA	204.	/ NA	328.	/ NA	328.	/ NA	549./	NA
Systems compared to reference system																
Conv. Improved Gas Heat, Hot Water, and Central Electric A/C (SF-1)	55	12.8	.73/	5.92	.64/	5.84	188.	/ 202.	293./	307.	293.	/ 307.	496.	/ 510.
Conv. Gas Heat, Hot Water, Central Electric Chilling, 65/85 Thermostat (SF-l).	56	5.5	-.00/	11.36	-.00/	11.36	193.	/ 206.	312./	325.	312./	325.	514./	527.
Solar Hot Water; Flat-Plates (1977 Prices); SF-1	57	12.0	9.46/	19.01	7.97/	17.74	211./	235.	317.1	341.	314./	338.	518./	542.
Solar Hot Water; Gas Heat, Central Electric AIC; SF-1	57/125	12.0	6.66/	14.88	5.61/	13.98	204./	225.	310./	331.	308./	329.	512./	533.
Solar Heating; Flat-Plates (1977 Prices), Low-Temp. Storage; SF-1	58	34.1	15.44/	24.47	13.06/	22.44	266.	/ 330.	340./	404.	323./	390.	498.	/ 564.
Solar Heating; Flat-Plates (Future Price), Low-Temp. Storage; SF-1	58/127	34.1	9.80/	16,19	8.28/	14.89	226./	272.	300./	345.	289./	336.	464./	511.
Reference system																
Conv. Insulated House; Gas Heat, Hot Water, and Central Electric A/C (IF-1)	59	0.0	NA/	NA	NAI	NA	174./	NA	266./	NA	266.	/ NA	456./	NA
Systems compared to reference system																
Conv. Insulated House; Improved Gas Heat, Hot Water, and Central Electric A/C (IF-1) .	60	12.3	.74/	7.97	.65/	7.89	62./	176.	240./	255.	240./	255.	416.	/ 431.
Conv. Insulated House; Oil Heat and Central Electric A/C (IF-5).	61	-12.9	-3.74/	-11.07	-3.53/	-10.89	96./	211.	303./	318.	303.	/ 318.	506./	521.
Conv. Insulated House; Gas Heat, Hot Water, and Absorption Cooling (IF-7)	62	-3.5	-5.61	I -35.64	-3.86/	-34.15	76./	193.	277./	294.	276.	/ 293.	455./	472.
Conv. Engine Cogeneration; Insulated House; Stirllig Engine (Low Eff.), Heat Pump, Gas Hot Water, Low-Temp. Storage, Gas Backup; IF-9	63	42.8	5.23/	8.44	4.92/	8.17	134./	157.	200./	222.	198.	/ 221.	259./	282.
Reference system																
Conv. Oil Heat and Central Electric A/C (SF-5)	64	0.0	NA/	NA	NA/	NA	230./	NA	301./	NA	301./	NA	609./	NA
Systems compared to reference system																
Conv. Improved Oil Heat, Gas Hot Water, and Central Electric A/C (SF-5)	65	13.9	.57/	5.44	.50/	5.38	211.1	227.	274./	290.	274./	290.	546.1	563.
Conv. Oil Heat and Central Electric A/C, 65/85 Thermostat (SF-5).	66	4.7	-.00/	13.48	-.00/	13.48	219./	235.	285./	301.	285./	301.	575./	590.
Solar Hot Water; Flat-Plates (1977 Prices); SF-5 ., ...	67	13.0	7.56/	15.98	6.37/	14.96	234./	260.	298./	324.	294./	321.	568./	595.
Solar Hot Water; Flat-Plates (Future Price); SF-5	67/135	13.0	5.32/	12.67	4.48/	11.96	227.1	250.	291./	314.	288./	311.	563./	586.
Solar Heating; Flat-Plates (1977 Prices), Low-Temp. Storage; SF-5	68	36.9	12.35/	19.85	10.45/	18.23	283./	350.	334./	400.	317.	/ 386.	530./	599.
Solar Heating; Flat-Plates (Future Price), Low-Temp. Storage; SF-5	68/1 37	36.9	7.84/	13.22	6.62/	12.19	243./	291.	294.1	341.	283.	/ 332.	496.	/ 545.

Summary description of system	Table number	Percent solar	Effective cost of solar energy (¢/kWh)		Levelized monthly cost of energy service			
			No credits	200/0 ITC	Projection 1 No credits	Projection 2 No credits	Projection 2 20% ITC	Projection 3 20%ITC
Reference system								
Conv. Gas Heat, Hot Water, and Absorption A/C (SF-7)	69	0.0	NA/ NA	NA/ NA	208./ NA	341./ NA	341./ NA	552./ NA
Systems compared to reference system								
Solar Heating and Cooling; Flat-Plates (1977 Prices); Low-Temp. Storage; SF-7	70	42.2	12.12/ 19.69	10.25/ 18.09	258./ 326.	326./ 395.	310./ 380.	461./ 532.
Solar Heating and Cooling; Flat-Plates (Future Price); Low-Temp. Storage; SF-7	70/143	42.2	7.69/ 13.19	6.50/ 12.17	218./ 267.	287./ 336.	276./ 327.	427./ 479.
Reference system								
Conv. All Electric House; Heat Pump (SF-2)	71	0.0	NA/ NA	NA/ NA	261./ NA	349./ NA	349./ NA	709./ NA
Systems compared to reference system								
Conv. All Electric House; Improved Heat Pump (SF-2)	72	15.2	1 .31/ 4.85	1 .19/ 4.74	239./ 254.	317./ 332.	316./ 331.	631./ 646.
Solar Hot Water; Flat-Plates (1977 Prices); SF-2	73	20.4	4.08/ 8.25	3.44/ 7.71	248./ 272.	321./ 345.	318./ 342.	617./ 642.
Solar Hot Water; Flat-Plates (Future Price); SF-2	73/1 50	20.4	2.86/ 6.46	2.41/ 6.07	241./ 261.	314./ 335.	312./ 333.	611. / 632.
Solar Heating; Flat-Plates (1977 Prices), Low-Temp. Storage; SF-2	74	28.7	5.48/ 10.04	4.36/ 9.08	254./ 290.	321./ 358.	312.1350.	587./ 626.
Solar Heating; Flat-Plates (Future Price), Low-Temp. Storage; SF-2	74/154	28.7	2.99/ 6.40	2.24/ 5.76	233./ 261.	301./ 329.	295. / 323.	570./ 599.
Solar Heating; Flat-Plates (1977 Prices), Low-Temp. Storage; SF-2	75	40.3	9.64/ 15.30	8.15/ 14.03	298./ 362.	357./ 421.	340./ 407.	581.1 647.
Solar Heating; Flat-Plates (Future Price), Low-Temp. Storage; SF-2	75/154	40.3	6.12/ 10.12	5.17/ 9.31	258./ 303.	317./ 362.	306./ 353.	547./ 594.
PV System; Air-Cooled Si Arrays ($50/W); SF-2	76	57.0	7.64/ 12.05	6.42/ 11.01	305./ 376.	362./ 433.	343./ 416.	574./ 648,
PV System; Air-Cooled Thin-Film Arrays ($10/W); SF-2	77	40.2	3.53/ 6.33	2.95/ 5.83	242./ 274.	307./ 339.	301./ 333.	565./ 598.
PV Cogeneration; One-Axis Concentrator With Si Cells ($15/W Cells); Multitank Low-Temp. Storage; SF-2	78	63.3	16.44/ 24.93	13.84/ 22.72	448. / 599.	494./ 645.	447.1 605.	633./ 791.
Reference system								
Conv. Insulated All Electric House; Heat Pump (IF-2)	79	0.0	NA/ NA	NAI NA	226./ NA	300./ NA	300./ NA	601./ NA
Systems compared to reference system								
Conv. Insulated All Electric House; Improved Heat Pump (IF-2)	80	10.7	1.67/ 8.21	1.51/ 8.08	214./ 230.	282./ 298.	282./ 297.	558./ 574.
PV System, Insulated House; Air-Cooled Si Arrays ($0.50/W); IF-2	81	36.8	7.75/ 3.11	6.53/ 12.07	247./ 292.	304./ 348.	293./ 340.	524./ 570.
PV System, Insulated House; Air-Cooled Si Arrays ($0.50/W), Battery Storage; IF-2	82	32.8	12.09/ 9.31	10.42/ 17.88	268./ 321.	323./ 376.	310./ 366.	534./ 589.

PV System, Insulated House; Air-Cooled St Arrays ($0.50/W); IF-2.	83	46.3	6.55/ 10.96	5.55/ 10.11	238./ 284.	289. / 335.	278./ 326.	487./ 534.
PV System, Insulated House; Air-Cooled Thin-Film Arrays ($O.1O/W); IF-2	84	35.8	2.70/ 5.71	2.29/ 5.36	202./ 226.	257./ 281.	254./ 279.	480. / 505.
PV Cogeneration, Insulated House; One-Axis Concentrator With Si Cells ($15/W Cells), Multitank Low-Temp. Storage; Improved IF-2	85	58.9	12.06/ 18.78	10.18/ 17.17	302./ 392.	343.1 432.	317./ 410.	482./ 575
PV System, Insulated House; Heat Engine, Air-Cooled Silicon Arrays ($0.50/W), Low-Temp. Storage; IF-2.	86	71.2	5.78/ 9.02	5.02/ 8.37	178. / 230.	224./ 276.	212. / 266.	255./ 308.
Reference system								
Conv. All Electric House; Resistance Heat and Window A/C (SF-3).	87	0.0	NA/ NA	NA/ NA	307./ NA	421./ NA	421./ NA	883./ NA
Systems compared to reference system								
Conv. All Electric House; Resistance Heat and Window A/C, 65/85 Thermostat (SF-3). .	88	2.5	-.00/ 9.38	-.00/ 9.38	301./ 310.	412. / 421.	412. / 421.	865./ 874.
Solar Heating; Flat-Plates (1977 Prices), Low-Temp. Storage; SF-4	89	43.9	6.54/ 10.12	5.53/ 9.26	309./ 369.	380./ 440.	363./ 425.	651./ 713.
Solar Heating; Flat-Plates (Future Price), Low-Temp. Storage; SF-4	89/198	43.9	4.14/ 6.60	3.50/ 6.05	269./ 310.	340./ 381.	329. / 372.	617.1 659.
Reference system								
Conv. Insulated All Electric House; Resistance Heat and Window A/C (IF-3). . . .	90	0.0	NA/ NA	NA/ NA	240./ NA	326./ NA	326./ NA	676./ NA
Systems compared to reference system								
Conv. Insulated House; Resistance Heat and Window A/C, 65/85 Thermostat (IF-3)	91	3.5	-.00/ 11.10	-.00/ 11.10	234./ 245.	318./ 328.	318./ 328.	658./ 668
FORT WORTH SINGLE FAMILY								
Reference system								
Conv. Gas Heat, Hot Water, and Central Electric AIC (SF-7)	92	0 0	NA/ NA	NA/ NA	132./ NA	188./ NA	188./ NA	326./ NA
Systems compared to reference system								
Conv. Improved Gas Heat, Hot Water, and Central Electric A/C (SF-1)	93	9.2	.87/ 7.70	.76/ 7.60	127./ 141.	177. / 191.	176. / 190.	309./ 323.
Conv. Insulated House; Gas Heat. Hot Water, and Central Electric A/C (IF-1) .	94	20.2	-.21/ 2.81	-.35/ 2.69	115./ 129.	158./ 172.	158./ 171.	277./ 291.
Solar Hot Water Flat-plates (1977 Prices); SF-1	95	12.1	8.20/ 16.89	6.91/ 15.79	146./ 169.	193. / 216.	189. / 213.	320./ 344.
Solar Hot Water; Flat-plates (Future price); SF-1	95/5	12.1	5.83/ 13.39	4.91 / 12.60	1 39./ 160.	186./ 207.	184. / 205.	315./ 335
Solar Heating; Fiat-plates (1977 Prices), Low-Temp. Storage; SF-1	96	25.3	13.17/ 21.60	11.16/ 19.88	189. / 236.	227. / 274.	215. / 264.	337./ 386
Solar Heating; Flat-plates (Future Price), Low-Temp. Storage; SF-1	96/127	25.3	8.57/ 14.87	7.25/ 13.74	163./ 198,	201. / 236.	193. / 230.	315./ 351.

Summary description of system	Table number	Percent solar	Effective cost of solar energy (¢/kWh)		Levelized monthly cost of energy service			
			No credits	200/0 ITC	Projection 1 No credits	Projection 2 No credits	Projection 2 20%ITC	Projection 3 20%ITC
Reference system								
Conv. Gas Heat, Hot Water, and Absorption A/C (SF-7)	97	0.0	NA/ NA	NAI NA	134./ NA	206./ NA	206./ NA	321./ NA
Systems compared to reference system								
Conv. Insulated House; Gas Heat, Hot Water, and Absorption A/C (IF-7)	98	19.4	-.63/ 3.02	-.68/ 2.98	116./ 133.	173./ 190.	173./ 190.	273./ 290.
Solar Heating and Cooling; Flat-Plates (1977 Prices); Low-Temp. Storage; SF-7	99	47.7	9.45/ 15.43	7.99/ 14.19	208./ 277.	242./ 311.	225./ 297.	306./ 378.
Solar Heating and Cooling; Flat-Plates (Future Price); Low-Temp. Storage; SF-7	99/143	47.7	6.00/ 10.37	5.07/ 9.57	168./ 219.	202./ 253.	191 ./ 244.	272./ 324.
Reference system								
Conv. All Electric House; Heat Pump (SF-2)	100	0.0	NA/ NA	NAI NA	179./ NA	233./ NA	233./ NA	451./ NA
Systems compared to reference system								
Conv. All Electric House; Improved Heat Pump (High Cost) (SF-2)	101/125	15.0	6.16/ 11.89	5.59/ 11.41	186./ 210.	232./ 256.	229./ 254.	417./ 441.
Conv. All Electric House; Improved Heat Pump (SF-2)	101	15.0	1.55/ 5.61	1.41/ 5.49	166./ 183.	213./ 229.	212./ 229.	399./ 416.
Solar Hot Water; Flat-Plates (1977 Prices); SF-2	102	22.3	3.54/ 7.53	2.98/ 7.06	173./ 198.	215./ 240.	212./ 237.	384./ 409.
Solar Hot Water; Flat-Plates (Future Price); SF-2	102/1 50	22.3	2.50/ 6.01	2.11/ 5.67	166./ 188.	209./ 230.	206./ 228.	379./ 401.
Solar Heating; Flat-Plates (1977 Prices), Low-Temp. Storage; SF-2	103	26.5	6.26/ 11.09	5.31/ 10.28	192./ 227.	232./ 268.	225./ 262.	388./ 425.
Solar Heating; Flat-Plates (Future Price), Low-Temp. Storage; SF-2	103/152	26.5	4.16/ 8.03	3.53/ 7.49	176./ 205.	216./ 245.	212./ 241.	375./ 405.
Solar Heating; Flat-Plates (1977 Prices), Low-Temp. Storage; SF-2	104	34.9	7.65/ 12.70	6.48/ 11.70	209./ 258.	245./ 294.	234./ 285.	380./ 431.
Solar Heating; Flat-Plates (Future Price), Low-Temp. Storage; SF-2	104/1 54	34.9	4.98/ 8.79	4.21/ 8.13	183./ 220.	219./ 256.	212./ 250.	358./ 396.
PV System; Air-Cooled Si Arrays ($0.50/W); SF-2	105	64.9	6.78/ 10.79	5.70/ 9.86	238./ 311./	266./ 339.	247./ 322.	362./ 437.
PV System; Air-Cooled Thin-Film Arrays ($O.1O/W); SF-2	106	45.5	2.63/ 5.03	2.20/ 4.66	165./ 195.	199./ 230.	194./ 225.	335./ 366.
PV Cogeneration; One-Axis Concentrator With Si Cells ($15/W Cells), Multitank Low-Temp. Storage; SF-2	107	58.4	17.96/ 27.33	15.12/ 24.91	401./ 553.	427. / 579.	380./ 540.	484./ 643.

Reference system																
Conv. Insulated All Electrlc House; Heat Pump (IF-2)	*108*	**0.0**	*NA/*	*NA*	*NA/*	*NA*	157./	NA	*203./*	*NA*	*203./*	*NA*	*387./*	*NA*
Systems compared to reference system																
Conv. Insulated All Electrlc House; Improved Heat Pump (IF-2)	*109*	*11.4*	*1.79/*	*8.31*	*1.63/*	*8.17*	*150./*	*167.*	*191. /*	*208.*	*190./*	*207.*	*355./*	*372.*
PV System, Insulated House; Air-Cooled Si Arrays ($ I/W); Improved IF-2	*11 2/172*	*50.3*	*10.38/*	*16.54*	*8.76/*	*15.16*	*234./*	*306.*	*261./*	*333.*	*242.1*	*317.*	*352./*	*427.*
PV System, Insulated House; Air-Cooled Thin-Film Arrays ($0.50/W); IF-2	*110*	*40.2*	*6.89/*	*11.79*	*5.81I*	*10.86*	*186. /*	*232.*	*217./*	*263.*	*207./*	*254.*	*333./*	*380.*
PV System, Insulated House; Air-Cooled Thin-Film Arrays ($0.50/w), Battery Storage; IF-2	*111*	*36.6*	*10.54/*	*16.97*	*9.08/*	*15.72*	*208./*	*263.*	*238.1*	*293.*	*226./*	*282.*	*347./*	*403.*
PV System, Insulated House; Air-Cooled Si Arrays ($0.50/W); Improved IF-2	*112*	*50. 3*	*5.92/*	*9.98*	*5.01/*	*9.21*	*181./*	*229.*	*208./*	*256.*	*198./*	*247.*	*308./*	*357.*
PV System, Insulated House; Air-cooled Thin-Film Arrays ($0.1()/W); IF-2	*113*	*38.6*	*2.51/*	*5.37*	*2.13/*	*5.05*	*143. /*	*169.*	*173./*	*199.*	*170. /*	*196.*	*294./*	*320.*
PV System, Insulated House; One-Axis Concentrator With Si Cells ($0.15/W Cells); Multitank Low-Temp. Storage; Improved IF-2	*114*	*58.9*	*11.77/*	*18.40*	*9.93/*	*16.83*	*258./*	*348.*	*278./*	*369.*	*253./*	*348.*	*337./*	*432.*
Conv. Engine Cogeneration, Insulated House; Stirling Engine (Low Eff.), Direct Drive Heat Pump, Gas Hot Water, Low-Temp. Storage, No Grid Connect Ion (IF-9).	*115*	*51.4*	*2.96/*	*4.89*	*2.80/*	*4.75*	*115./*	*138.*	*152. /*	*175.*	150./	173.	183./	207.
PV Heat Engine System, Insulated House; Air-Cooled Thin-Film Arrays ($0.50/W), Low-Temp. Storage; IF-2	*116*	*70.5*	*5.82/*	*9.10*	*5.07/*	*8.46*	*161./*	*215.*	*184./*	*237.*	171 ./	227.	192./	247.
Reference system																
Conv. All Electric House; Resistance Heat and Window AIC (SF-3)	*117*	**0.0**	*NA/*	*NA*	*NA/*	*NA*	*182./*	*NA*	*245./*	*NA*	*245./*	*NA*	*502./*	*NA*
Systems compared to reference system																
Conv. All Electric House; Resistance Heat and Window A/C, 65/85 Thermostat (SF-3).	*118*	*8.6*	*-.00/*	*3.17*	*-.00/*	*3,17*	*169./*	*178.*	*227./*	*236.*	*227./*	*236.*	*462./*	*471.*
Conv. Insulated All Electric House; Resistance Heat and Window AIC (IF-3).	*119*	*27.0*	*.15/*	*1.28*	*.08/*	*1.22*	*143./*	*153.*	*190./*	*200.*	*189./*	*199.*	*379./*	*389.*
Conv. Insulated All Electric House; Resistance Heat and Window AIC, 65/85 Thermostat (IF-3)	*120*	*34.4*	*.12/*	*1.00*	*.06/*	*.96*	*132./*	*142.*	*174./*	*184.*	*174./*	*184.*	*346./*	*356.*
OMAHA SINGLE FAMILY																
Reference system																
Conv. Gas Heat, Hot Water, and Central Electric A/C (SF-1).	*121*	*0.0*	*NAI*	*NA*	*NAI*	*NA*	*125./*	*NA*	*180./*	*NA*	*180./*	*NA*	*302./*	*NA*

Summary description of system	Table number	Percent solar	Effective cost of solar energy (¢/kWh)		Levelized monthly cost of energy service			
			No credits	20% ITC	Project Ion 1 No credits	Projection 2 No credits	Projection 2 20% ITC	Projection 3 20% ITC
Systems compared to reference system								
Conv. Improved Furnace, Gas Hot Water, and Central Electric A/C (SF-1)	122	11.9	.77/ 6.21	.67/ 6.12	121./ 136.	169. / 185.	169. / 184.	284./ 299.
Conv. Gas Heat, Hot Water, and Central Electric A/C, 65/85 Thermostat (SF-1)	123	10.0	-.00/ 6.08	-.00/ 6.08	115./ 129,	167. / 181.	167. / 181.	272./ 286.
Solar Hot Water; Flat-Plates (1977 Prices); SF-1	124	10.4	9.04/ 19.03	7.62/ 17.81	142. / 166,	191. / 215.	188. / 213.	303./ 328.
Solar Hot Water; Flat-Plates (Future Price); SF-1	125	10.4	6.42/ 15.16	5.41/ 14.30	135.1 157.	185./ 206.	182./ 204.	298./ 320.
Solar Heating; Flat-Plates (1977 Prices), Low-Temp. Storage; SF-1	126	24.0	14.00/ 22.72	11.98/ 21.00	191./ 240.	233./ 282.	221.1 272.	330./ 381.
Solar Heating; Fiat-Plates (Future Price), Low-Temp. Storage; SF-1	127	24.0	9.40/ 15.98	8.07/ 14.85	165./ 202.	207./ 244.	199./ 237.	308./ 346.
Reference system								
Conv. Insulated House; Gas Heat, Hot Water, and Central Electric A/C (IF-1)	128	0.0	NA/ NA	NA/ NA	111./ NA	154./ NA	154./ NA	261./ NA
Systems compared to reference system								
Conv. Insulated House; Improved Gas Heat, Hot Water, and Central Electric A/C (IF-1)	129	11.3	.80/ 8.40	.70/ 8.31	108./ 124.	146./ 161.	146./ 161.	248./ 264.
Conv. Insulated House; Gas Heat, Hot Water, and Central Electric A/C, 65/85 Thermostat (IF-1)	130	11.4	-.00/ 7.16	-.00/ 7.16	103./ 117.	142./ 156.	142./ 156.	234./ 249.
Reference system								
Conv. Oil Heat and Central Electric A/C (SF-5)	131	0.0	NA/ NA	NA/ NA	204./ NA	263./ NA	263./ NA	522./ NA
Systems compared to reference system								
Conv. Improved Oil Heating, Gas Hot Water, and Central Electric A/C (SF-5)	132	13.0	.61/ 5.79	.53/ 5.72	186./ 204.	237./ 255.	237./ 255.	461./ 479.
Conv. Oil Heat and Central Electric A/C, 65/85 Thermostat (SF-5). .,	133	8.7	-.00/ 7.30	-.00/ 7.30	195./ 212.	249./ 267.	249./ 267.	492./ 509.
Solar Hot Water; Flat-Plates (1977 Prices); SF-5	134	11.4	7.23/ 16.16	6.09/ 15.19	209./ 236.	261./ 288.	257./ 285.	486./ 513.
Solar Hot Water; Flat-Plates (Future Price); SF-5	135	11.4	5.14/ 13.07	4.33/ 12.38	202./ 227.	254./ 279.	252./ 276.	480./ 505.
Solar Heating; Flat-Plates (1977 Prices); SF-5 .	136	26.2	11.55/ 18.97	9.941 17.60	244./ 297.	288./ 340.	277./ 331.	466./ 520.
Solar Heating; Flat-Plates (Future Price); Low-Temp. Storage; SF-5	137	26.2	7.87/ 13.58	6.81/ 12.68	219./ 259.	262./ 302.	255./ 296.	444./ 485.

Reference system																
Conv. Insulated House; Oil Heat and Central Electric A/C (IF-5).	138	0.0	NA/	NA	NA/	NA	125./	NA	173./	NA	173./	NA	285./	NA
Systems compared to reference system																
Conv. Insulated House; Improved Oil Heating, Hot Water, and Central Electric A/C (IF-5)	139	12.6	.64/	7.44	.56/	7.37	121./	138.	162./	180.	162./	179.	268./	286.
Conv. Insulated House; Oil Heat and Central Electric A/C, 65/85 Thermostat (IF-5).	140	10.2	-.00/	8.06	-.00/	8.06	116./	133.	160./	177.	160./	177.	258./	274.
Reference system																
Conv. Gas Heat, Hot Water, and Absorption A/C (SF-7)	141	0.0	NA/	NA	NA/	NA	127./	NA	188./	NA	188./	NA	297./	NA
Systems compared to reference system																
Solar Heating and Cooling; Flat-Plates (1977 Prices), Low. Temp. Storage; SF-7	142	44.4	9.97/	16.35	8.43/	15.04	211./	281	245./	315.	228./	301.	313./	385
Solar Heating and Cooling; Flat-Plates (Future Price); Low-Temp. Storage; SF-7	143	44.4	6.33/	11.00	5.351	10.17	171./	223.	205./	256.	194./	247.	279./	332.
Reference system																
Conv. Insulated House; Gas Heat, Hot Water, and Absorption A/C (IF-7)	144	0.0	NAI	NA	NA/	NA	111./	NA	158./	NA	158./	NA	254./	NA
Systems compared to reference system																
Solar Engine System, Insulated House; ORCS and One-Axis Tracker (Future Design), High-Temp. Oil Storage; IF-7	145	33.0	27.39/	41.58	23.57/	38.32	244./	334.	276./	365.	251./	345.	280./	374.
Reference system																
Conv. All-Electric House; Heat Pump (SF-2) . .	146	0.0	NA/	NA	NA/	NA	190./	NA	249./	NA	249./	NA	490. /	NA
Systems compared to reference system																
Conv. Improved Heat pump (SF-2).	147	18.1	.98/	3.65	.89/	3.57	173./	189.	223./	239.	222./	238.	424. /	440.
Conv. All Electric House; Heat Pump, 65/85 Thermostat (SF-2).	148	7.0	-.00/'	5.96	-.00/	5.96	181./	195.	237./	251.	237./	251.	462./	476.
Solar Hot Water; Flat-Plates (1977 prices); SF-2	149	16.8	3.90/	8.18	3.29/	7.65	191./	215.	241./	265.	237./	262.	442./	467.
Solar Hot Water; Flat-plates (Future price); SF-2	150	16.8	2.76/	6.50	2.33/	6.12	184./	205.	234./	255.	232./	253.	437./	458.
Solar Heating; Using Flat-plates (1977 Prices), Low-Temp. Storage; SF-2	151	20.5	6.56/	11.57	5.58/	10.73	209./	243.	257./	292.	250.1	286.	447./	483.
Solar Heating; Flat-Plates (Future Price), Low-Temp. Storage; SF-2	152	20.5	4.48/	8.54	3.80/	7.96	195./	222.	243./	271.	238./	267.	435./	464.
Solar Heating; Flat-Plates (1977 Prices), Low-Temp. Storage; SF-2	153	29.1	7.63/	12.60	6.47/	11.60	227./	275.	271./	319.	260./	310.	438./	488.
Solar Heating; Flat-Plates (Future Price); Low-Temp. Storage; SF-2	154	29.1	4.97/	8.69	4.20/	8.04	201./	237.	245./	281.	237./	275.	416./	453.
PV System; Air-Cooled Si Arrays ($1/W); SF-2.	155	53.6	12.61/	19.33	10.60/	17.61	363./	484.	401./	521,	365./	490.	517./	643.
PV Cogeneration; Air-Cooled Si Arrays ($0.50/W); SF-2	156	53.6	6.83/	10.83	5.74/	9.90	259./	331.	297./	369.	277./	352.	430./	505.

Summary description of system	Table number	Percent solar	Effective cost of solar energy (¢/kWh)		Levelized monthly cost of energy service			
			No credits	20% ITC	Projection 1 No credits	Projection 2 No credits	Projection 2 20%ITC	Projection 3 20% ITC
Systems compared to reference system—Continued								
PV Cogeneration; Water-Cooled Si Arrays ($1/w), Multitank Low-Temp. Storage; SF-2.	157	63.2	15.18/ 23.00	12.78/ 20.94	441./ 607.	472./ 638.	421./ 594.	547./ 720.
PV Cogeneration; Water-Cooled Si Arrays ($0.50/w), Multitank Low-Temp. Storage; SF-2	158	63.2	8.64/ 13.36	7.27/ 12.19	303./ 403.	334./ 434.	305./ 409.	431./ 535.
PV System; Air-Cooled Thin-Film Arrays ($0.30/W); SF-2	159	29.2	5.54/ 9.56	4.64/ 8.80	212./ 252.	259./ 298.	250./ 291.	438./ 478.
PV System; Air-Cooled Thin-Film Arrays ($O.1O/W); SF-2	160	37.9	2.61/ 4.94	2.18/ 4.58	183./ 213.	226./ 256.	221. / 251.	395./ 426.
PV System; Air-Cooled Thin-Film Arrays ($O.1O/W), Battery Storage; SF-2	161	35.2	3.45/ 6.18	2.93/ 5.74	189./ 221.	231./ 263.	225./ 258.	397./ 430.
PV Cogeneration; One-Axis Concentrator With Si Cells ($15/W Cells); Multitank Low-Temp. Storage; SF-2	162	59.4	14.73/ 22.39	12.41 I 20.40	411./ 563.	441./ 593.	395./ 553.	517./ 675.
PV Cogeneration; One-Axis Concentrator With Si Cells ($15/W Cells), Multitank Low-Temp. and Battery Storage; SF-2.	163	57.5	15.83/ 23.96	13.37/ 21.86	423./ 579.	452. / 609.	405. / 568.	526./ 690.
PV Cogeneration; One-Axis Concentrator With Si Cells ($1/W Cells), Multitank Low-Temp. Storage; SF-2	164	69.3	3.93/ 6.35	3.30/ 5.82	200./ 256.	226./ 282.	21 1./ 270.	317./ 376.
Reference system								
Conv. Insulated All Electric House, Heat Pump (IF-2)	165	0.0	NA/ NA	NA/ NA	161./ NA	208./ NA	208./ NA	399./ NA
Systems compared to reference system								
Conv. Insulated All Electric House; Heat Pump, 65/85 Thermostat (IF-2)	166	8.0	-.00/ 7.36	-.00/ 7.36	153./ 168.	197./ 212.	197./ 212.	375./ 390.
Conv. Insulated All Electric House; Improved Heat Pump (IF-2)	167	13.5	1.31 / 6.15	1.19/ 6.04	152./ 169.	193. / 210.	193./ 210.	362./ 379.
Solar Hot Water, Insulated House; Flat-Plates (Future Price), Low-Temp. Storage, IF-2.	168	22.0	2.74/ 6.67	2.31/ 6.30	154./ 177.	193./ 215.	190. / 213.	346./ 368.
Solar Heating, Insulated House Using Fiat-Plates (Future Price), Low-Temp. Storage, I F-2.	169	33.9	4.54/ 8.36	3.84/ 7.76	167./ 200.	200./ 233.	194./ 228.	330./ 364.
Solar Heating, Insulated House; Flat-Plates (Future Price); Low-Temp. Storage; IF-2.	170	38.6	4.86/ 8.63	4.11/ 7.99	171./ 208.	202./ 240.	195./ 233.	323./ 362.
PV System, Insulated House; Air-Cooled St Arrays ($ I/W); IF-2	171	36.1	12.55/ 20.08	10.54/ 18.36	248./ 318.	284./ 353.	265./ 338.	409./ 481.
PV System, Insulated House; Air-Cooled Si Arrays ($ I/W); Improved IF-2	172	47.9	9.71/ 15.47	8.18/ 14.16	240./ 311.	270./ 341.	252./ 325.	376./ 450.
PV System, Insulated House; Air-Cooled Si Arrays ($0.50/W); IF-2.	173	36.1	6.88/ 11.75	5.77/ 10.81	196./ 241.	231 ./ 276.	221./ 267.	364./ 411.
PV System, Insulated House; Air-Cooled Si Arrays ($0.50/W), Battery Storage; IF-2.	174	32.1	10.67/ 17.17	9.17/ 15.89	217./ 271.	251./ 305.	239./ 294.	378./ 433.

Systems compared to reference system—Continued									
PV System, Insulated House; Air-Cooled Si Arrays ($0.50/W), Improved IF-2	175	47.9	5.48/ 9.25	4.62/ 8.52	188./ 234.	218./ 265.	208. / 256.	332./ 381.
PV System, Insulated House: Air-Cooled Thin-Film Arrays ($O30/W); Improved IF-2	176	32.2	3.91/ 7.51	3.31/ 7.00	163./ 193.	199./ 228.	194./ 224.	336./ 367.
PV System, Insulated House; Air-Cooled Thin-Film Arrays ($ O. IO/W); Improved IF-2	177	37.3	2.321 4.95	1.97/ 4.65	150. / 175.	183./ 209.	180. / 206.	317. / 343.
PV Cogeneration, Insulated House; One-Axis Concentrator With Si Cells ($15/W Cells), With Multitank Low-Temp. Storage; improved IF-2	178	57.4	10.89/ 17.00	9.19/ 15.55	266./ 356.	291./ 381.	266. / 359.	366./ 460.
PV Cogeneration, Insulated House; One-Axis Concentrator With Si Cells ($15/W Cells), Multitank Low-Temp. Storage; Improved IF-2.	179	80.5	14.34/ 21.81	12.09/ 19.89	381./ 536.	397./ 552.	351./ 512.	416. / 578.
PV Cogeneration, Insulated House; One-Axis Concentrator With Si Cells ($1/W Cells), Multitank Low-Temp. Storage; Improved IF-2	180	43.4	5.27/ 9.07	4.43/ 8.35	178./ 220.	208./ 250.	198. / 242.	321./ 365.
PV Cogeneration, Insulated House; One-Axis Concentrator With Si Cells ($1/W Cells), Multitank Low-Temp. Storage; IF-2	181	52.1	5.381 9.01	4.52/ 8.28	183./ 232.	210.I 259.	198. / 249.	308./ 358.
PV Cogeneration, Insulated House; One-Axis Concentrator With Si Cells ($1/W Cells), Multitank Low-Temp. Storage; Improved IF-2. . . . . , , ., ...	182	63.0	4.99/ 8.21	4.23/ 7.56	182. / 234.	205./ 257.	192. / 246.	285./ 340.
PV Cogeneration, Insulated House; Air-Cooled Si Arrays ($0.50/w), Diesel Backup, Low-Temp. Storage; IF-2.	183	72.0	5.39/ 8.38	4.70/ 7.79	161 ./ 216.	178./ 234.	165. / 223.	182. / 239.
PV Cogeneration, Insulated House; Plastic Dye Concentrator, Multitank Low-Temp. Storage; IF-2.	184	79.7	3.42/ 5.75	2.87/ 5.28	165. / 212.	185./ 233,	174. / 223.	256./ 306.
PV System, Insulated House; Plastic Dye Concentrator; IF-2 ... , ...	185	74.8	3.02/ 5.24	2.53/ 4.82	165./ 208.	191./ 234.	181 ./ 225.	285. / 329.
Conv. Engine Cogeneration, Insulated House; Stirling Engine (Low Eff), Direct Drive Heat Pump, Gas Hot Water, Low-Temp. Storage (IF-9).	186	56.3	2.49/ 4.07	2.35/ 3.95	106. / 129.	133. / 156,	131./ 155.	157./ 180.
Reference system								
Conv. All Electric House; Resistance Heat and window A/C (SF-3)	187	0.0	NA/ NA	NAI NA	206./ NA	277./ NA	277./ NA	570./ NA
Systems compared to reference system								
Conv. All Electric House; Resistance Heat and Window A/C, 65/85 Thermostat (SF-3). .	188	4.7	-.00/ 5.17	-.00/ 5.17	198./ 208.	267./ 277.	267./ 277	547/ 557
Solar Heating: Flat-plates (1977 Prices), Low-Temp. Storage; SF-4	191	32.7	5.37/ 8.59	4.55/ 7.89	226./ 270	277./ 320	265./ 311	471./ 517
Solar Heating, Flat-Plates (Future Price), Low-Temp. Storage; SF-4	192	32.7	3.46/ 5.79	2.93/ 5.34	200./ 232.	251./ 282.	243, / 276	449 / 482.

Summary description of system	Table number	Percent solar	Effective cost of solar energy (¢/kWh)		Levelized monthly cost of energy service			
			No credits	20% ITC	Project Ion 1 No credits	Projection 2 No credits	Project Ion 2 20% ITC	Project Ion 3 20% ITC
Systems **compared to reference** system—Continued								
Solar Heating; Flat-Plates *(1977 Prices), Low-Temp. Storage; SF-3*	197	38.3	6.23/ 9.76	5.27/ 8.94	243./ 300.	290./ 347.	275./ 334.	466. / 525.
Solar Heating; Flat-Plates (Future Price), Low-Temp. Storage; SF-3	198	38.3	3.95/ 6.41	3.34/ 5.89	207./ 246.	254./ 293.	244./ 285.	435. / 476.
100-Percent Solar Heating; Insulated House; Flat-Plates (1977 Prices), Community Seasonal Low-Temp. Storage; SF-2.	199	76.4	6.79/ 10.21	5.66/ 9.25	299./ 408.	321. / 430.	285. / 399.	375. / 490
100-Percent Solar Heating; Flat-Plates (Future Price), Central Electric A/C, Community Seasonal Aquifer Storage; SF-2.	200	76.4	4.15/ 6.27	3.521 5.72	215./ 282.	237./ 304.	217. / 287.	307./ 377
Reference system								
Conv. Insulated All Electric House; Resistance Heat and Window A/C (IF-3).	201	0.0	NA/ NA	NA/ NA	159./ NA	211./ NA	211./ NA	423./ NA
Systems compared to reference system								
Conv. Insulated All Electric House; Resistance Heat and Window A/C, 65/85 Thermostat (IF-3)	202	5.9	-.00/ 6.54	-.00/ 6.54	152. / 163.	201 ./ 213.	201./ 213,	403. / 414.

OMAHA SINGLE FAMILY TIME-OF-DAY RATES

Reference system								
Conv. All Electric *House (SF-3); Marginal Electric Rates.*	*T187*	**0.0**	NA/ NA	NA/ NA	*278./ NA*	*278./ NA*	*278./ NA*	*278./ NA*
Systems compared to reference system								
Conv. Off-Peak Electric Heating; Window A/C, Low-Temp. Storage (SF-4).	189	-.7	-79.79/ •'*'*"	-62.11 / •**** •	*218./ 241.*	*218./ 241.*	*213./ 237.*	*213./ 237.*
Conv. Off-Peak Electric Heating and Chilling; Low-Temp. Thermal and Cold Storage (SF-4).	190	-.3	● .**.*, ••••••	● ***.., .****,	*236./ 278.*	*236./ 278.*	*226./ 270.*	*226./ 270.*
Solar Off-Peak Heating; Flat-Plates (1977 Prices), Low-Temp. Storage; SF-4	193	32.3	6.32/ 10.04	5.31/ 9.18	*246./ 296.*	*246./ 296.*	*232. / 284.*	*232./ 284.*
Solar Off-Peak Heating; Flat-Plates (Future Price), Low-Temp. Storage; SF-4	194	32.3	*4.39/ 7.22*	*3,67/ 6.60*	*220./ 258.*	*220./ 258.*	*210./ 250.*	*210./ 250.*
Solar Heating and Cooling; Flat-Plates (1977 Prices), Low-Temp. Thermal and Cold Storage; Off-Peak Electric Backup Heating and Chilling	*195*	*32.7*	*9.71/ 15.03*	*8.241 13.77*	*268./ 341.*	*268./ 341.*	248./ 324.	248.1 324.
Solar Off-Peak Heating and Cooling; Flat-Plates (1977 Prices), Low-Temp. Storage; SF-4	*196*	*32.7*	*7.80/ 12.24*	*6.62/ 11.23*	*242./ 303.*	*242./ 303.*	*226./ 289.*	*226./ 289.*

ALBUQUERQUE HIGH RISE (196 UNITS)														
Reference system														
Conv. Central Electric Chilled-Water System With Fan Coil Units and a Central Gas Boiler (HR-1)	203	0.0	NA/	NA	NA/	NA	51./	NA	71./	NA	71./	NA	129/	NA
Systems compared to reference system														
Solar Hot Water; Flat-Plates (1977 Prices); HR-1	204	8.1	12.20/	18.90	9.05/	17.55	58.I	63.	76./	81.	74./	80	129./	136
Solar Hot Water; Flat-Plates (Future Prices); HR-1	204/278	8.1	7.61/	13.28	5.66/	12.45	54./	59.	72./	77.	71./	76	126./	132
Solar Heating; I-Cover Pond, Seasonal Aquifer Storage; HR-1	205	26.4	8.45/	11.17	6.61/	10.38	65./	72.	77.I	84.	72./	82	122./	132
PV System; Air-Cooled Si Arrays ($1/W), Battery Storage; HR-1	206	45.7	21.56/	26.53	16.38/	24.32	136./	158.	152./	174.	129./	165	170./	205
PV System; Air-Cooled Si Arrays ($0.50/W); HR-1	207	51.1	8.47/	11.05	6.23/	10.09	84.I	96.	100.I	113.	89.I	108	132./	151
PV System; Air-Cooled Si Arrays ($ I/W); HR-1	207/281	51.1	15.28/	19.38	11.26/	17.67	117./	138.	134./	154.	114./	146	157.I	189.
PV System; Air-Cooled Si Arrays ($0.50/W), Battery Storage; HR-1	208	45.7	12.55/	15.69	9.57/	14.42	96./	110.	112.I	126.	99./	21	140./	161
PV System; Air-Cooled Thin-Film Arrays ($0.30/W); HR-1	209	11.7	26.18/	34.42	19.68/	31.65	78./	88.	98.I	107.	90./	04	144./	157
Reference system														
Conv. Central Gas Boiler and Absorption Chilling, Two-Pipe System to Fan-Coil Units (HR-7)	210	0.0	NAI	NA	NA/	NA	49./	NA	73./	NA	73./	NA	121./	NA
Systems compared to reference system														
PV System; Two-Axis Concentrator With GaAs Cells (Low Price), Battery and Multitank Low-Temp. Storage; HR-8	211	74.9	4.31 I	5.68	3.26/	5.23	85. /	95	100. /	110.	92. /	107	153./	168.
PV System; Two-Axis Concentrator With GaAs Cells (Low Price), Battery and Multitank Low-Temp. Storage; HR-7	212	97.1	5.371	676	4.14/	6.24	101./	115.	1 14. /	128.	102. /	123.	155. /	176.
PV System; Two-Axis Concentrator With GaAs Cells (Low Price), iron-REDOX Battery and Multitank Low-Temp. Storage; HR-7	213	106.8	6.66/	8.27	5.16/	762	87./	105.	87.1	105.	71. /	98	71. /	98.
PV System; Two-Axis Concentrator With GaAs Cells (Low Price), iron-REDOX Battery and Multitank Low-Temp. Storage; HR-7	214	06.6	8.35/	10.19	6.53/	9.41	106. /	126.	106./	126.	86./	118	86./	118
100-Percent Solar PV System; Two-Axis Concentrator With GaAs Cells (Low Price), Iron-REDOX Battery and Multitank Low-Temp. Storage; HR-7	215	00.0	9.67/	11.75	7.58/	10.86	1 14. /	135.	114./	135.	92./	126.	92./	126.
PV System; Two-Axis Concentrator With GaAs Cells (Low Price), Battery and Multitank Low-Temp. Storage; HR-7	216	21.4	6.62/	8.13	5.15/	7.50	97. /	116.	97. /	116	79. /	108	79./	108
Conv. Engine Cogeneration; Gas-Fired Diesel/ORCS Engine/Generator and Low-Temp. Storage; HR-8	217	37.7	11.51/	14.44	8.97/	13.35	78. /	90.	99 I	111	89. /	106	109./	126
PV System; Two-Axis Concentrator With GaAs Cells (Low Price), Multitank Low-Temp. Storage; HR-7	218	73.5	5.03/	6.52	3.85/	6.02	61. /	72	69. /	81.	60. /	77.	69./	85

Summary description of system	Table number	Percent solar	Effective cost of solar energy (¢/kWh)		Levelized monthly cost of energy service			
			No credits	20% ITC	Project Ion 1 No credits	Project Ion 2 No credits	Projection 2 20% ITC	Projection 3 20% ITC
Systems compared to reference system—Continued								
Solar Engine; LT ORCS and 2-Cover Pond, Seasonal Aquifer Storage, HR-7	219	100.0	15.95/ 9.25	12.35/ 7.72	179. / 213.	1 79. / 213.	141. / 197.	141. / 197.
Solar Engine; LT ORCS and 2-Cover Pond, Seasonal Aquifer Storage, HR-7	220	100.0	11.19/ 3.75	8.49/ 2.60	1 30./ 156.	1 30. / 156.	102. / 144.	102. / 144.
Solar Engine Cogeneration; Two-Axis Dish With High Eff. Stirling Engine/Generator, Gas Backup, and Low-Temp. Storage; HR-8	221	66.9	4.51/ 5.56	3.78/ 5.25	56./ 63.	67./ 74.	62./ 72.	72./ 82.
Solar Engine Cogeneration; Two-Axis Dish With Low Eff. Stirling Engine/Generator, Gas Backup, and Multitank High- and Low-Temp. Storage; HR-8	222	71.5	6.01/ 7.49	4 77/ 6.97	67./ 78.	77. / 88.	68./ 84.	77./ 93
Solar Engine Cogeneration; Two-Axis Dish With Low Eff. Stirling Engine/Generator, Gas Backup, and Muititank High- and Low-Temp. Storage; HR-7	223	76.4	7.31I 9.00	5.81 I 8.36	79./ 92.	87./ 100.	75./ 95.	82./ 103
Solar Engine Cogeneration; Two-Axis Dish With High Eff. Stirling Engine/Generator, Gas Backup, and Multitank Low-Temp. Storage; HR-8. .,	224	81.4	6.53/ 8.02	5.23/ 7.46	75./ 87.	81. / 93.	70./ 89.	76./ 95
Solar Engine Cogeneration; Two-Axis Dish, Stirling Engines (High Eff.), Battery and High- and Low-Temp. Storage; Gas Backup; HR-7	225	98.4	11.39/ 14.54	8.26/ 13.20	1 30. / 162.	131./ 163.	99./ 149.	99./ 150.
100-Percent Solar Engine Congelation; Two-Axis Dish, Stirling Engine (High Eff.) Battery and High- and Low-Temp. Storage; HR-7	226	100.0	12.25/ 15.51	8.96/ 14.11	1 40. / 174.	1 40, / 174.	107. / 160.	107. / 160.
Reference system								
Conv. All Electric System; Central Electric Chilled-Water System and Fan Coil Units With Resistance Heaters (HR.2)	227	0.0	NAI NA	NA/ NA	84./ NA	113./ NA	113./ NA	232./ NA
Systems *compared to reference system*								
Solar Hot Water; Flat-Plates (1977 Prices); HR-2	228	19.3	3.35/ 5.07	2.48/ 4.71	87./ 92.	11 4./ 119,	112. / 118.	220./ 227.
Solar Heating; Flat-Plates (Future Price); HR-2	228/322	19.3	2.09/ 3.53	1.55/ 3.30	84. / 88.	1 10. / 115.	109. / 114.	218. / 223.
Solar Heating; Flat-Plates (1977 Prices), Low-Temp. Storage; HR-2	229	31.4	4.45/ 6.05	3.29/ 5.55	95./ 102.	1 20. / 128.	115. / 125	218./ 228.
Solar Heating; Flat-Plates (Future Price), Low-Temp. Storage; HR-2	229/324	31.4	2.80/ 4.03	2.07/ 3.72	87, / 93.	1 13. / 118.	109. / 117.	212./ 220.
Solar Heating; Flat-Plates (1977 Prices), Seasonal Low-Temp. Storage; HR-2	230	52.6	5.55/ 7.42	3.87/ 6.70	85./ 99.	97. / 112.	84. / 106.	134. / 156.
Solar Heating; Flat-Plates (Future Price), Seasonal Low-Temp. Storage; HR-2	2301328	52.6	4.30/ 5.89	2.95/ 5.32	75. / 88.	87./ 100.	77 I 95.	126. / 145.

Solar Heating; Flat-Plates (1977 Prices), Cheap Seasonal Low-Temp. Storage; HR-2 .	231	52.6	4.11/	5.43	3.00/	4.96	74./	84.	86 I	96	77.I	92	127./	142
Solar Heating; Flat-Plates (Future Price), Seasonal Aquifer Storage; HR-2	232	52.6	2.70/	3.70	1.96/	3.39	63./	71.	75. /	83.	69./	80	119./	130
Solar Heating; I-Cover Pond, Seasonal Aquifer Low-Temp. Storage; HR-1	233	51.6	1.91/	2.60	1.52/	2.43	57. /	62.	69./	74.	66./	73.	116./	123,
Solar Heating; Two-Axis Concentrator (Med. Price), Multitank Low-Temp. Storage; HR-2 .	234	307	3.69/	5.08	2.79/	4.70	91. /	98.	117./	123.	113./	121	216./	224
PV Cogeneration; Two-Axis Concentrator With Si Cells (Med. Price), Multitank Low-Temp. Storage; HR.2 ., ...	235	37.1	4.13/	5.54	3.10/	5.10	95./	103.	120./	128	114./	125	214./	225
PV Cogeneration; Two-Axis Concentrator With Si Cells (Med. Price) Replaced Every 10 Years, Multitank Low-Temp. Storage; HR-2	236	37.1	6.85/	7.96	5.81/	752	110./	116.	135./	141	129.I	138	229./	239
PV System; Two-Axis Concentrator With Si Cells (Med. Price); HR-2	237	6.2	22.59/	30.53	16.99/	2814	102. /	109.	130./	138	125./	135.	240./	250.
PV System; Two-Axis Concentrator With St Cells (Med. Price) Replaced Every 10 Years; HR-2 . . . . , ...	238	6.2	38.15/	44.34	32.58/	41.96	116./	122.	145./	150.	139. /	148.	254./	263
PV Cogeneration; Two-Axis Concentrator With Si Cells (Med. Price), Multitank Low-Temp. Storage; HR-2	239	54.3	5.28/	6.77	3.971	6.2	110./	122.	1 33. /	145.	122. /	140	214./	232.
PV Cogeneration; One-Axis Concentrator With Si Cells ($15/W Cells), Multitank Low-Temp. Storage; HR-2. , ...	240	63.4	10.02/	12.47	7.55/	11.4	164. /	187.	1 88. /	210.	164 /	201.	261/	297
PV Cogeneration; one-Axis Concentrator With Si Cells ($15/W Cells), Battery and Multitank Low-Temp. Storage; HR-2	241	62.9	10.29/	12.77	7.77/	11,69	166. /	189.	189. /	212	166. /	202	262./	298.
PV Cogeneration; Two-Axis Concentrator With High Eff. Cells, Multitank Low-Temp. Storage; HR-2	242	101.1	2.90/	3.69	2.20/	3.39	103./	115.	123. /	135,	1 13. /	130.	192./	210
PV System; Two-Axis Concentrator With High Eff. Cells, iron.REDOX Battery and Multitank Low-Temp. Storage; HR-2	243	96.3	3.08/	3.92	2.35/	3.60	1 04. /	116.	124. /	136.	1 13. /	131.	194. /	211.
PV Cogeneration; Two-Axis Concentrator With High Eff. Cells, Multitank Low-Temp. Storage; Diesel Backup; HR-2	244	787	5.18/	6.40	4.03/	5.91	81. /	96.	92./	106.	78./	100.	88./	109.
Reference system														
Conv. All-Electric System; Resistance Heat, Window A/C and Individual Electric Water Heaters (HR-4)	245	0.0	NA/	NA	NA/	NA	83.1	NA	112./	NA	112./	NA	229./	NA
Systems compared to reference system														
PV System; Air-Cooled Si Arrays ($ I/W); HR-4	2461349	36.0	14.95/	18.68	11 .00/	17.00	149./	168.	1 73. /	192.	153./	184.	254./	284.
PV System; Air-Cooled Si Arrays ($0.50/W); HR-4 . . . . . .,	246	36.0	8.32/	10.55	6.12/	9.61	11 5./	127.	140./	151.	129./	146	229./	247
PV System; Air-Cooled Thin-Film Arrays ($0.10/W); HR-4	247	25.2	5.37/	7.07	3.94/	6.46	95./	101.	1 20. /	126	115./	124	219.I	228.
PV System; Air-Cooled Thin-Film Arrays, Vertical on Wall ($0.10/W); HR-4	248	6.3	3.63/	6.37	2.60/	5.94	84./	86.	112./	114	111./	114	223./	226

Summary descruiption of system	Table number	Percent solar	Effective cost of solar energy (¢/kWh)		Levelized monthly cost of energy service			
			No credits	20% ITC	Projection 1 No credits	Projection 2 No credits	Project Ion 2 20% ITC	Projection 3 20% ITC
BOSTON HIGH RISE (196 UNITS)								
Reference system								
Conv. Electric Chilled-Water System With Fan Coil Units and Central Gas Boiler (HR-1) . . .	249	0.0	NA/ NA	NA/ NA	105./ NA	1 55. / NA	155./ NA	2 8 3 . / N A
Systems compared to reference system								
Solar Hot Water; Fiat-Plates (1977 Prices); HR-1	250	6.7	16.86/ 27.36	12 50/ 25.50	111./ 118.	1 57. /	155./ 163.	279./ 287.
Solar Hot Water; Flat-Plates (Future Price); HR-1	250/278	6.7	10.55/ 19.63	7.83/ 18.47	107./ 113	153 /	152. / 158.	276./ 282.
Conv. Engine Cogeneration; Diesel/ORCS, Absorption and Electric Chillers, Low-Temp. Storage; HR-8. . . . . , ...	251	33.5	13.64/ 16.43	11 .44/ 15.49	102. / 111.		140./ 153	181./ 194.

235./

Reference system														
Conv. All Electric System; Resistance Heat, Individual Window A/C, and Electric Water Heaters (HR-4)	260	0 0	NA/	NA	NA/	NA	169. /	NA	231./	NA	231./	NA	483./	NA
Systems *compared to reference system*														
PV System; Air-Cooled Si Arrays ($0.50/W); HR-4	261	22.5	12.04/	15.32	8.85/	13.96	181./	192.	231./	242	220./	238	423/	441.
PV System; Air-Cooled Si Arrays ($1/W); HR-4	261/349	22.5	21.62/	27.08	15.91/	24.65	214.I	233.	264.I	283	244./	275	448./	478.
PV System; Air-Cooled Thin-Film Arrays ($O.10/W); *HR-4*	262	159	5.69/	8.38	3.64/	7.51	160.I	167.	213.I	220.	208./	217	423./	433.
FORT WORTH HIGH RISE (196 UNITS)														
Reference system														
Conv. Central Electric Chilled-Water System With Fan Coil Units and Central Gas Boiler for Heat (HR-1)	263	0 0	NA/	NA	NA/	NA	76.I	NA	102.I	NA	102./	NA	186./	NA
Systems compared to reference system														
Solar Hot Water; Flat-Plates (1977 Prices), HR-1	264	6.5	15.48/	26.32	11 .47/	2461	85./	93.	108./	117.	105./	115	187. /	197
Solar Hot Water; Flat-Plates (Future Price), HR-2	264/278	6 5	9.62/	19.15	7.14/	18.09	81./	88.	104./	111	102./	110	184 /	192
Conv. Engine Cogeneration, Diesel/ORCS, Absorption and Electric Chillers, Low-Temp Storage; HR-8.	265	36.2	6 67/	9.12	5.29/	8.54	72./	83.	96./	106.	90./	104	112./	126.
Solar Engine Cogeneration; Two-Ax Is Dish, Stirling Engine (Low Eff.) High-Temp. Storage, Gas Backup, *HR-8*	266	560	11 51/	14.67	8.86/	13.54	112./	132.	128./	149	111./	141.	126./	156
Solar Engine Cogeneration; Two-Axis Dish, Stirling Engine (Low Eff,), High-Temp. and Multitank Low-Temp. Storage, Gas Backup; HR-8	267	63.2	9 74/	1208	7.83/	11.27	106. /	123.	120. /	137.	106. /	31.	118./	143.
Solar Engine Cogeneration; Two-Axis Dish, Stirling Engine (High Eff.), Multitank Low-Temp. Storage, Gas BackUp; HR-8	268	707	8 12/	1008	6.53/	9.41	99./	115.	109. /	125.	97./	20	107./	130.
Reference system														
Conv. All Electric; Central Chilled-water System and Fan Coil Units With Resistance Heaters (HR-2)	269	0.0	NA/	NA	NA/	NA	101./	NA	133./	NA	133./	NA	265./	NA
Systems compared to reference system														
Solar Hot Water; Flat-Plates (1977 Prices), HR-2	270	15.8	4.87/	7.97	3.63/	7.44	108./	115.	138./	146.	135./	144.	259./	268.
Solar Hot Water; Flat-Plates (Future Price); HR-2.	270/322	15.8	4.18/	6.76	3.42/	6.43	106./	112.	136./	143.	135/	142.	258./	266.
Solar Heating; Flat-Plates (1977 Prices), Low-Temp. Storage; HR-2	271	224	5.97/	8.74	4.42/	8.08	115./	124.	144./	154.	139./	151.	260./	272.

Summary description of system	Table number	Percent solar	Effective cost of solar energy (¢/kWh)		Levelized monthly cost of energy service			
			No credits	20% ITC	Projection 1 No credits	Projection 2 No credits	Projection 2 20% ITC	Project ion 3 20% ITC
Systems compared to reference system—continue								
Solar Heating; Flat-Plates (Future Price), Low-Temp. Storage; HR-2	271/324	22.4	3.76/ 6.03	2.78/ 5.61	107./ 115.	137./ 144.	133./ 143.	254./ 264.
Solar Heating; Flat-Plates (1977 Prices), Seasonal Low-Temp. Storage; HR-2	272	38.6	7.15/ 9.89	5.02/ 8.98	110./ 127.	129./ 146.	117./ 140.	195./ 218.
Solar Heating; Flat-Plates (Future Price), Seasonal Low-Temp. Storage; HR-2	272/328	38.6	5.43/ 7.79	3.75/ 7.07	100./ 114.	119./ 133.	109./ 129.	187./ 207.
Solar Heating; Flat-Plates (1977 Prices), Seasonal Aquifer Storage; HR-2	273	38.6	5.57/ 7.69	4.08/ 7.05	101./ 114.	120./ 133.	111./ 129.	189./ 207.
Solar Heating; Flat-Plates (Future Price), Aquifer Thermal Storage; HR-2	273/232	38.6	3.57/ 5.24	2.61/ 4.83	89./ 99.	108./ 118.	103./ 116.	180./ 194.
Reference system								
Conv. All Electric System; Resistance Heat, Individual Window A/C and Electric Water Heaters (HR-4)	274	0.0	NAI NA	NAI NA	96./ NA	127./ NA	127./ NA	256./ NA
Systems **compared to reference system**								
PV System; Air-Cooled Thin-Film Arrays ($O.1O/W); HR-4	275	19.5	4.90/ 7.28	3.07/ 6.50	101./ 107.	129./ 135.	124./ 133.	239./ 248.
OMAHA HIGH RISE (196 UNITS)								
Reference system								
Conv. Central Electric Chilled-Water System With Fan Coil Units and Central Gas Boiler (HR-1)	276	0.0	NA/ NA	NA/ NA	57./ NA	76./ NA	76./ NA	129./ NA
Systems **compared to reference system**								
Solar Hot Water; Flat-Plates (1977 Prices); HR-1	277	5.2	20.05/ 34.32	14.86/ 32.11	66./ 74.	84./ 92.	82./ 91.	133./ 142.
Solar Hot Water; Flat-Plates (Future Price); HR-1	278	5.2	12.54/ 25.13	9.31/ 23.75	62./ 69.	80./ 87.	79./ 86.	130./ 138.
Solar Heating; I-Cover Pond, Seasonal Aquifer Storage; HR-I	279	34.0	12.80/ 16.48	10.07/ 15.32	94./ 107.	1 05./ 118.	95./ 113.	140./ 158.
Solar Heating; I-Cover Pond, Seasonal Aquifer Storage; HR-1	280	34.0	8.30/ 11.06	6.67/ 10.36	78./ 87.	89./ 98.	83./ 96.	128./ 141.
PV System; Air-cooled Si Arrays ($1/W); HR-1	281	31.3	23.43/ 30.38	17.26/ 27.75	122./ 144.	137./ 160.	1 17./ 151,	153./ 187.
PV System; Air-Cooled Si Arrays ($1/W), **Battery Storage; HR-1**	282	34.3	22.66/ 28.93	16.97/ 26,50	124./ 146.	139./ 161.	118./ 152.	150./ 184.
PV System; Air-Cooled Si Arrays ($1/W), Seasonal iron-REDOX Battery Storage; HR-1	283	66.0	33.33/ 41.07	25.061 37.54	257./ 309.	265./ 318.	209./ 294.	217./ 302.
PV System; Air-Cooled Si Arrays ($0.50/W); HR-1	284	31.3	13.07/ 17.68	9.64/ 16.21	88./ 103.	1 04./ 119.	93./ 114.	128./ 150.
PV System; Air-Cooled Si Arrays ($0.50/W), Battery Storage; HR-1	285	34.3	13.71/ 18.06	10.31/ 16.61	92./ 108.	107./ 122.	95./ 117.	127./ 149.

PV System, AirCooled Si Arrays ($0 50/W), Seasonal iron-Redox Battery Storage; HR-1	286	66.0	16.85/	21.04	12.74/	19.29	1 44. /	173.	153/	181.	125./	170.	133./	177.
PV System; Alr-Cooled Th!n-Film Arrays ($0.30/W); HR-1	287	18.8	12.21/	17.69	9.01/	16.32	73. /	84.	90./	101.	84./	98.	125./	139.
PV System; Air-Cooled Thin-Film Arrays ($0.10/W), HR-1	288	18.8	7.75/	12,21	5.73/	11.34	65./	73.	81./	90.	78./	88	119./	130.
PV System; Air-Cooled Thin-Film Arrays ($O.1O/W) Vertical on Wall, HR-1 .,	289	9.2	3.71/	10.09	2.75/	9.68	57./	63.	75./	81.	74./	80.	120./	127.
PV Cogeneratlin; Two-Ax Is Concentrator With Si Cells, Multitank Low-Temp Storage; HR-1	290	35.4	9.01/	12.32	6.86/	11.40	78./	90.	91./	103.	83./	99.	119./	136.
PV Cogeneration; Diesel Backup, Two-Axis Concentrator With High Eff. Cells, Multitank Low-Temp. Storage, HR-2	291	53.7	7.81/	10.71	5.62/	9.78	76./	92.	87./	103.	75./	98.	86./	109.
Solar Engine Cogeneration; One-Axis Tracker, ORCS Engines, High-Temp. Storage: HR-7	292	13.9	45.74/	57.69	35.95/	53.51	108./	125.	129./	147	115./	141.	1 35. /	161.
Reference system														
Conv. Gas Heat, Hot Water, and Absorption Chilling (HR-7)	293	0.0	NA/	NA	NA/	NA	57./	NA	79./	NA	79./	NA	125./	NA
Systems compared to reference system														
Solar Heating and Cooling, One-Axis Tracker (Future Design), Low-Temp. Storage; HR-7	294	35.7	8.20/	11.67	5.94/	10.71	80./	94.	93./	107.	84./	103.	121./	140.
Solar Heating and Cooling; One-Axis Tracker (Future Design), Low-Temp. Storage; HR-7	295	28.1	17.73/	22.87	13.91/	21.23	105. /	121.	120./	135.	108. /	130.	147, /	169.
Solar Engine; LT ORCS, 2-Cover Pond, Seasonal Aquifer and Low-Temp. Storage; HR-7	296	100.0	17.85/	21.51	13.98/	19.85	220./	260.	220./	260.	177. /	242.	177. /	242.
PV Cogeneration; Two-Axis Concentrator With Si Cells (Low Price), Multitank Low-Temp. Storage; HR-7	297	46.4	6.41/	8.87	4.89/	8.22	77./	90.	90./	102.	82./	99.	11 1./	128.
PV Cogeneration; Two-Axis Concentrator With Si Cells (Low Price) Multitank Low-Temp. Storage; HR-7.	298	54.4	6.61/	8.96	5.04/	8.29	82./	96.	93./	107.	84./	103.	11 1./	130.
PV Cogeneration; Two-Axis Concentrator														
PV Cogeneration; Two-Axis Concentrator With GaAs Cells (Low **Price), Seasonal Low. Temp.** Storage; HR-8.	299/300	82.3	7.04/	9.27	5.25/	8.57	99./	120.	104./	124.	88./	118.	108./	137.
PV Cogeneration; Two-Axis Concentrator With GaAs Cells (Low Price), Battery and Multitank Low-Temp. Storage; HR-7 . . .	301	100.0	17.66/	21.27	13.88/	19.66	218./	258.	218./	258.	176./	240.	176./	240.
PV Cogeneration; One-Axis Tracker With Si Cells ($15/W Cells), and Multitank Low-Temp. Storage; HR-7 . . . . . ., ...	302	30.1	20.06/	26.12	15.10/	24.01	115./	135.	131./	151.	114./	144.	151./	180.
PV System; One-Axis Tracker With Si Cells ($1/W cells), Multitank Low-Temp. Storage;	303	35.9	9.20/	12.57	7.03/	11.65	84./	97.	98./	111.	89./	108.	123./	142.
PV Cogeneration; Two-Axis Concentrator . With High Eff. Cells, Multitank Low-Temp. Storage; HR-7.	304	68.9	5.861	7.87	4.45/	7.26	84./	100.	95./	110.	84./	106.	107./	128.

Summary descrlption of system	Table number	Percent solar	Effective cost of solar energy (¢/kWh)		Levelized monthly cost of energy service			
			No credits	20% ITC	Projection 1 No credits	projection 2 No credits	Projection 2 20% ITC	Projection 3 20% ITC
Systems **compared to reference** *system—Continued*								
Solar Engine; LT ORCS, 2-Cover Pond, Seasonal Aquifer and Low-Temp. Storage; HR-7	305	100.0	16.46/ 21.81	11 .39/ 19.64	205./ 264.	205./ 264.	149. / 240.	149./ 240.
Conv. Engine Cogeneration; Diesel/ORCS Engines, Absorption and Electric Chillers, Low-Temp. Storage (HR-8)	306	35.6	9.52/ 11.86	8.13/ 11.27	77./ 87.	95./ 104.	89./ 101.	105./ 117.
Solar Engine Cogeneration; Two-Axis Dish, Stirling Engine (Low Eff.), Multitank Low-Temp. Storage; HR-8	307	50.9	7.23/ 9.26	5.96/ 8.72	77./ 88.	90./ 101.	83./ 98.	95./ 110.
Solar Engine Cogenerat!in; Two-Axis Dish, Stirling Engine (Low Eff.), Multitank Low-Temp. Storage; HR-8	308	62.5	9.21/ 11.56	7.39/ 10.78	97./ 113.	107./ 123.	94./ 17.	103./ 127.
Solar Engine Cogeneration; Two-Axis Dish, Stirling Engine (Low Eff.), High-Temp. and Multitank LowTemp. Storage; HR-8	309	65.3	9.23/ 11.60	7.35/ 10.80	99./ 116.	108./ 125.	95./ 19.	103./ 128.
Solar Engine Cogeneration; Two-Axis Dish, Stirling Engine (High Eff.), Multitank Low-Temp. Storage; HR-8	310	67.3	6.95/ 9.02	5.43/ 8.37	83./ 99.	92./ 108.	81./ 03.	89./ 111.
Solar Engine Cogeneration; Two-Axis Dish, Stirling Engine (High Eff.), Battery Storage, High- and Low-Temp. Storage; HR.8.	311	80.4	11.22/ 14.15	8.59/ 13.03	128./ 154.	133./ 159.	110./ 149.	115./ 154.
Solar Engine Cogeneration; Two-Axis Dish, Stirling Engine (Low Eff.), High-Temp. and Multitank Low-Temp. Storage; HR-8	312	82.0	12.11/ 15.06	9.41/ 13.90	138. / 164.	142./ 169.	118./ 159.	122./ 163.
Solar Engine Cogeneration; Two-Axis Dish, Stirling Engine (High Eff.), Battery, High-, and Low-Temp. Storage; HR-8	313	86.5	14.28/ 17.81	10.90/ 16.37	163. / 197.	167./ 200.	135./ 187.	138./ 190.
Solar Engine Cogeneration; Two-Axis Dish, Stirling Engine (High Eff.), Battery Storage; HR-8	314	98.9	16.75/ 21.21	12.33/ 19.33	206./ 255.	206./ 255.	158./ 234.	159./ 235.
Solar Engine Cogeneration; Two-Axis Dish, Stirling Engine (High Eff.), Battery, High-, and Low-Temp. Storage; HR-8	315	96.2	5.66/ 19.54	11.83/ 17.91	190./ 231.	191./ 232.	151./ 215.	152./ 216.
100-Percent Solar Engine Cogeneration; Two-Axis Dish, Stirling Engine (High Eff.), Battery, High-, and Low-Temp. Storage; HR-8.	316	100.0	7.53/ 22.14	12.93/ 20.18	217./ 267.	217./ 267.	166. / 246.	166./ 246.
Solar Engine Cogeneration; Two-Axis Dish, Stirling Engine (High Eff.), Battery, High-, and Low Temp. Storage; HR-7.	317	98.7	7.09/ 21.47	12.73/ 19.61	210./ 257.	210./ 257.	163. / 237.	763./ 238.
Solar Engine Cogeneration; Two-Axis Dish, Stirling Engine (High Eff.), Battery, High-, and Low-Temp. Storage; HR-7	318	98.1	17.10/ 21.42	12.79/ 19.58	209./ 255.	209./ 256.	163. / 236,	163./ 236.
Conv. Engine Cogeneration; Stirling Engine (Low Eff.), Absorption and Electric Chillers, Low-Temp. Storage (HR-8)	319	38.0	4.72/ 6.27	4.35/ 6.12	59.1 66.	76./ 82.	74./ 82.	90./ 97.

Reference system																
Conv. All Electric System; Central Chilled-Water System and Fan Coil Units With Resistance Heaters (HR-2)	320	0.0	NAI	NA	NA/	NA	87./	NA	11 3./	NA	113./	NA	2 2 3. /	N A
Systems compared to reference system																
Solar Hot Water; Flat-Plates (1977 Prices); HR-2	321	12.5	5.07/	8.41	3.76/	7.05	89. /	96.	13. /	20.	110./	119.	206./	215.
Solar Hot Water; Flat-Plates (Future Price); HR-2	322	12.5	3.17/	6.09	2.35/	5.74	85. /	91.	09./	15.	107./	114.	203./	210
Solar Heating; Flat-Plates (1977 Prices), Low-Temp. Storage; HR-2	323	19.5	6.18/	8.98	4.57/	8.29	94./	104	16. /	25	111./	123.	199./	212.
Solar Heating; Flat-Plates (Future Price), Low-Temp. Storage; HR-2	324	19.5	3.90/	6,18	2.88/	5.75	87./	94.	08./	16.	105./	115.	194./	203.
Solar Heating; Flat-Plates (1977 Prices), Low-Temp. Storage; HR-2	325	26,3	7.66/	10.43	5.65/	9.57	1 04. /	116,	123./	136.	114./	132.	196./	213.
Solar Heating; Flat-Plates (Future Price), Low-Temp. Storage; HR-2	326	26,3	4.83/	6.96	3.56/	6.42	91./	100.	111./	120,	105./	118.	186./	199.
100%. Solar Heating; Flat-Plates (1977 Prices), Seas. **Low-Temp. Storage; HR-2.**	327	61.1	7.73/	10.20	5.46/	9.24	127. /	152.	1 37./	163.	114./	153.	157./	197.
1000/. Solar Heating; Flat-Plates (Future Price), Seas. Low-Temp. Storage; HR-2	328	61.1	5.72/	7.75	3.98/	7.00	106./	127.	116./	138.	98./	130.	142./	173.
100% Solar Heating; Flat-Plates (1977 Prices), Seas. Aquifer Storage; HR-2.	329	61.1	6.76/	8.78	4.94/	8.01	11 7./	138.	127./	148.	108./	140.	152./	184.
1000/. Solar Heating; Flat-Plates (Future Price), Seas. Aquifer Storage; HR-2.	330	61,1	4.39/	5.88	3.19/	5.37	92./	107.	103./	118.	90./	113.	134./	156.
PV *System, Two-Axis Concentrator With Si Cells (Med. Price), Multitank Low-Temp. Storage; HR-2.*	331	42.3	6.90/	9.03	5.20/	8.30	1 09. /	124.	125./	140.	1 13. /	135.	178./	200.
PV Cogeneration; Two-Axis Concentrator With Si Cells (Med. Price), Multitank Low-Temp. Storage; HR-2.	332	43.0	4.23/	5.80	3.16/	5.35	90./	102.	106./	118,	98./	114.	163./	179.
PV Cogeneration; Two-Axis Concentrator With Si Cells, Multitank Low-Temp. Storage; HR-6.	333	46.4	4.86/	6.52	3.66/	6.00	96./	109.	11 1./	124.	101./	120.	163./	181.
PV Cogeneration; Two-Axis Concentrator With GaAs Cells, Multitank Low- Temp. Storage; HR-2	334	42.6	6.60/	8.64	4.98/	7.95	1 07./	122.	123./	138.	111./	133.	176 /	197.
PV Cogeneration; Two-Axis Concentrator With GaAs Cells (Low Price), Multitank Low-Temp. Storage; HR-2,	335	43.9	4.27/	5.78	3.26/	5.35	91./	102.	106./	118.	99./	114.	163./	179.
PV Cogeneration; Two-Axis Concentrator With GaAs Cells (Low Price), Seasonal Low-Temp. Storage; HR-2	336	73.3	4.53/	6.08	3.24/	5.53	96./	115.	1 04. /	123.	88./	116.	120./	149.
PV System; Two-Axis Concentrator With GaAs Cells (Low Price), Seasonal Multitank Low-Temp. Storage; HR-2.	337	74.1	5.52/	7.40	3.87/	6.70	1 09. /	133.	1 17. /	140.	96./	132.	128./	164.
PV Cogeneration; One-Axis Concentrator With Si Cells ($15/W Cells), Multitank Low-Temp. Storage; HR-2.	338	28.4	9.80/	13.17	6.97/	11.96	115./	132.	135./	151.	121./	145.	200./	224.
PV Cogeneration; One-Axis Concentrator With Si Cells ($15/W Cells), Multitank Low-Temp. Storage; HR-2.	339	40.7	13.53/	17.10	10.1 9/	15.67	1 54. /	179.	170./	195.	147./	185.	213./	251.
PV Cogeneration; One-Axis Concentrator With Si Cells ($1/W Cells), Multitank Low-Temp. Storage; HR-2.	340	31.9	5.30/	7.32	3.98/	6.76	94./	105..	113./	124.	106./	121.	181./	196.

Summary description of system	Table number	Percent solar	Effective cost of solar energy (¢/kWh)		Levelized monthly cost of energy service			
			No credits	20% ITC	Projection 1 No credits	Projection 2 No credits	Projection 2 20% ITC	Projection 3 20% ITC
Systems compared to reference system—Continued								
PV Cogeneration; One-Axis Concentrator With Si Cells ($1/w Cells), Multitank Low-Temp. Storage; HR-2.	341	46.1	6.51/ 8.43	4.98/ 7.78	108./ 123.	123. / 138.	111./ 133.	173./ 195.
PV Cogeneration; Two-Axis Concentrator With High Eff. Cells, Multitank Low-Temp. Storage; HR-2.	342	49.1	4.431 5.92	3.36/ 5.46	95.1 107.	110./ 122.	101./ 118.	163./ 181.
PV Cogeneration; Two-Axis Concentrator With High Eff. Cells, Seasonal Low-Temp. Storage; HR-2.	343	85.7	4.90/ 6.49	3.49/ 5.89	106./ 129.	112./ 136.	92./ 127.	117./ 152.
PV Cogeneration; Two-Axis Concentrator With High Eff. Cells, Seasonal Multitank Low-Temp. Storage; HR-2.	344	98.1	3.35/ 4.45	2.44/ 4.07	87./ 105.	91./ 110.	76./ 103.	95./ 122.
Solar **Engine Cogeneration; Two-Axis Dish, Stirling Engine (Low Eff.), High-Temp. and Multitank Low-Temp. Storage; HR-6 . . . . . .**	345	87.4	7.93/ 9.71	6.20/ 8.97	153./ 180.	160./ 186.	134./ 175.	159./ 201.
Solar Engine Cogeneration; Two-Axis Dish, Stirling Engine (Low Eff.), High Temp. and Multitank Low-Temp. Storage; HR-6	346	90.7	8.35/ 10.12	6.59/ 9.37	165./ 192.	171./ 198.	144./ 186.	169./ 212.
Reference system								
Conv All Electric System, Resistance Heat, Individual Window A/C, and Electric Water Heaters (HR-4)	347	0.0	NA/ NA	NA/ NA	83./ NA	09./ NA	109./ NA	215./ NA
Systems compared to reference system								
PV System; Air-Cooled Si Arrays ($ 1/W), HR-4	348	9.2	18.94/ 23.93	3.94/ 21.80	31./ 147.	53./ 69.	137./ 162.	225./ 250.
PV System; Air-Cooled Si Arrays ($ 1/W), HR-4	349	23.5	1 9.19/ 24.13	4.11/ 21.96	44./ 163.	65./ 84.	145./ 175.	230./ 260.
PV System, Air-Cooled Si Arrays ($ 1/W), Battery Storage; HR-4	350	22.7	21 .37/ 26.63	5.87/ 24.28	49./ 169.	69./ 89.	149./ 180.	233./ 264.
PV System, Air-Cooled Si Arrays ($0.50/W), HR-4	351	19.2	10.66/ 13.78	7.84/ 12.57	05./ 115.	27./ 37.	118./ 133.	206. / 221.
PV System, Air-Cooled Si Arrays ($0 501 W), HR-4	352	18.4	16.33/ 19.97	2.64/ 18.39	20./ 131.	42. / 53.	131./ 148.	218./ 235.
PV System: Air-Cooled Si Arrays ($0.50/W). HR-4	353	23.5	10.79/ 13.80	7.93/ 12.58	111./ 123.	132./ 144.	121./ 139.	206./ 224,
PV System, Air-Cooled Si Arrays ($0 501 W), Battery Storage, HR-4	354	41.3	1 7.49/ 21.33	13.23/ 19.51	176./ 202.	191./ 218.	162./ 205.	226./ 269.
PV System; Air-Cooled Si Arrays ($050/W): HR-4	355	46.7	12.64/ 15.80	9.31/ 14.38	158./ 182.	175. / 199.	149./ 188	219./ 258,
PV System, Air-Cooled Thin-Film Arrays ($0.30/W), HR-4	356	11.5	11.22/ 14.93	8.23/ 13.65	97./ 104.	120./ 127.	114./ 25.	209./ 220.
PV System; Air-Cooled Thin-Film Arrays" ($0.30/W); HR-4	357	12.9	11.01/ 14.53	8.09/ 13.29	98./ 106,	121 ./ 129.	115./ 26.	208./ 220.
PV System; Air-Cooled Thin-Film Arrays Vertical ($O.1O/W); HR-4.	358	5.2	3.441 6.77	2.461 6.35	82./ 85.	1 07. / 110.	106./ 10.	207./ 211.

PV System; Air-Cooled Thin-Film Arrays Vertical ($O.1O/W); HR-4.	359	4 9	3.95/	753	2.83/	7.05	83. /	86.	108. /	110	107./	110.	208./	211.
PV System, Air-Cooled Thin-Film Arrays ($0.10/W) HR4	360	129	6.96/	9.56	5.10/	8.77	89. /	95.	112./	118.	108./	116.	202./	210.
PV System; Air-Cooled Thin-Film Arrays ($0.10/W, HR-4	361	14.8	6.92/	9.38	5.08/	8.60	91./	97.	113./	119.	109./	117.	201./	209.
PV System, Air-Cooled Thin-Film Arrays ($0.10/W), Battery Storage: HR-4	362	162	7.391	983	5.46/	9.01	92./	99.	114./	121.	109./	119.	1 99./	209.
PV System, Air-Cooled Thin-Film Arrays ($0.10/w) HR-4	363	16.5	6.93/	9.30	5.08/	8.51	92, /	98.	1 14. /	120.	109./	118.	199./	208.
ALBUQUERQUE SHOPPING CENTER														
Reference system														
Conv. Gas Heat, Hot Water, and Central Electric A/C (SC-1).	364	0 0	NA/	NA	NA/	NA	8.5/	NA	114./	NA	114./	NA	219./	NA
Systems compared to reference system														
Solar Hot Water; Flat-Plates (1977 Prices); SC-1	365	3.0	8.99/	22.44	6.64/	21.44	88./	95.	115.1	122	114./	121	217./	225.
Solar Hot Water; Flat-Plates (Future price), SC-1	365/401	30	5.53/	18.20	4.08/	17.59	86./	92.	113.I	120,	112./	119	216./	223
Reference system														
Conv. Gas Heat, Hot Water, and Absorption Chilling (SC-7').	366	0.0	NA/	NA	NAI	NA	79. /	NA	115./	NA	115./	NA	202./	NA
Systems Compared to reference system														
Conv. Gas Heat, Hot Water, and Double- Effect Absorption Chilling (SC-7)	367	9.7	.91/	4.60	.581	4.46	76./	82.	105./	112.	104./	111.	186./	193.
Solar Heating; Flat-Plates (1977 Prices), Low-Temp. **Storage, sC-7 ... .**	**368**	19.8	13.81/	18.30	10.53/	16.90	1 19. /	135.	142./	158,	130./	53.	206. /	229.
Solar Heating; Flat-plates (Future price), Low. Temp. Storage; SC-7 . . . . . 368/405		19.8	7.76/	11.20	5.70/	10.32	96./	109.	120./	132.	112./	129.	189./	205.
100% Solar Heating and Cooling; Flat-Plates (1977 prices), Seas. Low-Temp. Storage; SC-7	369	30.1	13.20/	17.37	9.67/	15.87	136./	159.	153./	176.	133./	168.	204./	238.
Solar Heating; Flat-Plates (Future Prices), Low-Temp. Storage; SC-7 . . . . . 69/407		30.1	8.25/	11.25	6.05/	10.32	108./	125.	125./	142.	113./	137.	184. /	207.
Solar Heating and Cooling; One-Axis Tracker (1977 Design), Low-Temp. Storage; SC-7 . . .	**370**	19.6	12.97/	17.31	9.88/	15.99	115./	131.	139./	154.	128./	150.	204./	226.
Solar Heating and Cooling; One-Axis Tracker (Future Design), Low-Temp. Storage; SC-7 .	**371**	24.1	4.42/	6.73	3.33/	6.26	85./	96.	106./	117.	101./	114.	175./	188.
Solar Heating and Cooling; One-Axis Tracker (Future Design), Low-Temp. Storage; SC-7 .	**372**	-848	-1 .44/	-2.12	-1.10/	-1.97	149./	160.	235./	246.	230./	244.	364./	378,
Solar Heating and Cooling; One-Axis Tracker (Future Design), Seasonal Low-Temp. Storage; SC-7.	373	30.1	6.72/	916	5.17/	8.50	100./	113.	1 17./	130.	108./	127	179 I	197
Solar Heating; One-Axis Tracker (Future Design), Cheap Seasonal Storage; SC-7. . . .	374	30.1	5.71/	8.02	4.31/	7.43	94./	107.	111./	124.	104./	121	174./	191
Solar Engine Cogeneration; ORCS, One-Axis Tracker (Future Design), Multitank High-Temp. Storage, Absorption Chillers; SC-7 . .	375	15.2	44.88/	55.56	34.91/	51.30	193. /	223.	244./	273.	216./	262	262./	308.

Summary description of system	Table number	Percent solar	Effective cost of solar energy (¢/kWh)		Levelized monthly cost of energy service			
			No credits	20% ITC	Project Ion 1 No credits	Projection 2 No credits	Projection 2 20% ITC	Projection 3 20% ITC
Systems compared to reference system—Continued								
Solar Engine Cogeneration; ORCS, One-Axis Tracker (Future Design), Multitank High-Temp. 011 Storage, Absorption Chillers; SC-7 ., ...	376	36.5	19.97/ 24.85	15.35/ 22.88	189./ 222.	227./ 260.	196./ 247.	231./ 282.
Reference system								
Conv. All-Electric Shopping Center (SC-2)	377	0.0	NA/ NA	NA/ NA	90./ NA	120./ NA	120./ NA	239./ NA
Systems compared to reference system								
Solar Hot Water: Flat-Plates (1977 Prices); S C - 2	378	8.5	2.78/ 6.64	2.05/ 6.33	89,/ 96.	116. / 123.	1 15. / 122.	225./ 233.
Solar Hot Water; Flat-Plates (Future Price); " SC-2 . .	378/416	8.5	1.71/ 5.33	1.26/ 5.14	88./ 94.	11 5./ 121.	1 14. / 120.	224./ 231.
Solar Heating; Flat-Plates (1977 Price), Low-Temp. Storage: SC-2	379	12.7	3.59/ 6.58	2.65/ 6.18	92,/ 100.	118. / 126.	116. / 125.	224.1 233.
Solar Heating; Flat-Plates (Future Design), Low-Temp. Storage, SC-2	379/418	12.7	2.20/ 4.87	1.62/ 4.62	89./ 95.	1 15./ 122.	1 14. / 121.	221./ 229.
Solar Heating; Flat-Plates (1977 Price), Seasonal Low-Temp. Storage: SC-2	380	18.1	4.41 / 7.06	3.14/ 6.52	95./ 105.	120./ 130.	116, / 128.	217./ 229.
Solar Heating; Flat-Plates (Future Price), Seasonal Low-Temp. Storage, SC-2	380/422	18.1	3.12/ 5.49	2.19/ 5.09	91./ 99.	116. / 124.	112./ 123.	214./ 224.
PV System; Air-Cooled Si Arrays ($0 501 W); SC-2 ., ...	381	60.4	7.76/ 9.98	5.72/ 9.11	160./ 187,	181./ 207	156./ 197	239./ 279
PV System; Air-Cooled Si Arrays ($1/W); SC-2.	3811423	60.4	14.27/ 17.96	10.52/ 16.36	238./ 282.	258./ 302.	214./ 283.	296./ 366.
PV System; Air-Cooled Thin-Film Arrays ($0.10/W); SC-2	382	42.1	4.86/ 6.62	3.57/ 6.08	113. / 128.	136. / 150.	125./ 146.	216./ 237.
PV Cogeneration; Two-Axis Concentrator With High Eff. Cells, Multitank Low-Temp. Storage; SC-2	383	86.8	3.96/ 5.10	3.02/ 4.70	125./ 145.	141./ 161.	125./ 154.	191./ 219.
PV Cogeneration; Two-AxIs Concentrator With High Eff. Cells, Battery and Multitank Low-Temp. Storage; SC-2	384	80.6	4.36/ 5.58	3.33/ 5.14	127. / 147.	144. / 163.	127./ 156.	194./ 222.
FORT WORTH SHOPPING CENTER								
Reference system								
Conv. Gas Heat, Hot Water, and Central Electric A/C (SC-1).	385	0.0	NA/ NA	NA/ NA	103./ NA	137./ NA	137./ NA	264./ NA

Systems compared to reference system																
Solar Hot Water; Flat-plates (1977 Prices); SC-I	386	2.5	12.07/	32.09	8.92/	30.75	107./	116/	140./	149	138.I	148	264./	273.
Solar Hot Water; Flat-plates (Future Price); SC-1	386/401	2.5	7.36/	26.34	5.44/	25.52	105./	114.	137./	146	137./	146.	262.I	271.
Solar Heating and Cooling; Absorption A/C, One-Axis Tracker (Future Design Low-Temp. Storage; SC-7	387	229	8.62/	12.63	6.22/	11.60	110./	127	1 33./	150.	123./	145	202./	225
Solar Heating and Cooling; Absorption A/C, One-Axis Tracker (Future Design), Low-Temp. Storage; SC-7	388	18.4	13.69/	19.19	10.06/	17.64	123./	141.	148./	166	136. /	161	218./	243
Solar Heating and Cooling; Absorption A/C, One-Axis Tracker (Future Design), Low-Temp. Storage; SC-7	389	18.7	26.52/	34.87	19.54/	31.89	166./	194.	192./	220.	168./	210.	249./	291
Solar Heating and cooling; Absorption A/C, One-Axis Tracker (Future Design), Seasonal Low-Temp. Storage; SC-7	390	30.6	10.54/	14.68	7.48/	13.37	129./	151.	147./	170.	130./	163.	205./	238.
Solar Heating and Cooling; Absorption A/C, One-Axis Tracker (Future Design), Seasonal Low-Temp. Storage; SC-7	391	30.6	13.08/	17.68	9.46/	16.13	143./	168.	161./	186.	141./	178.	216./	253
Solar Heating and Cooling; Absorption A/C, One-Axis Tracker (1977 Design), Seasonal Low-Temp. Storage; SC-7	391/407	30.6	25.28/	32.57	18.50/	29.68	210./	250.	228./	269.	191./	253.	266./	327.
Solar Engine Cogeneration; ORCS and One-Axis Tracker (Future Design), 011 Backup, Multitank High-Temp. 011 Storage; SC-7.	392	-2.5	[illegible]		[illegible]		209./	242.	269./	301.	241./	289.	296./	345.
Reference system																
Conv. All-Electric Shopping Center (SC-2)	393	0.0	NA/	NA	NA/	NA	111./	NA	146./	NA	146./	NA	290./	NA
Systems compared to reference system																
Solar Hot Water; Flat-Plates (1977 Prices); SC-2	394	7.3	3.73/	9.48	2.76/	9.06	1 13./	122.	148./	156.	46./	155.	286./	295.
Solar Hot Water; Flat-Plates (Future Price); SC-2	394/416	7.3	2.27/	7.70	1.68/	7.44	111./	119.	146./	153.	45./	153.	284./	293.
Solar Heating; Flat-Plates (1977 Prices), Low-Temp. Storage; SC-2	395	11.3	4.571	8.77	3.371	8.26	110./	120.	141./	150.	38./	149.	264./	275.
Solar Heating; Flat-Plates (Future Price), Low-Temp. Storage; SC-2	395/420	11,3	2.80/	6.60	2.06/	6.29	106./	115.	1 37./	146.	35./	145.	261./	271.
Solar Heating; Flat-Plates (1977 Prices), Seasonal Low-Temp. Storage; SC-2 ... , . . .	396	15.1	4.99/	8.55	3.62/	7.96	113./	124.	144./	155.	140./	153.	263./	276.
Solar Heating; Flat-Plates (Future Price) Seasonal Low-Temp. Storage; SC-2	396/422	15.1	3.27/	6.44	2.35/	6.05	108./	118.	139./	148.	136./	147.	259./	271.
PV System; Air-Cooled Si Arrays ($0.50/W); SC-2	397	46.4	9.98/	13.02	7.35/	11.90	183./	211.	211./	239.	186./	228	297./	339.
PV System; Air-Cooled Si Arrays ($ I/W); SC-2.	3971423	46.4	18.33/	23.26	13.52/	21.20	261./	307.	288./	334.	243./	315.	354./	426.
PV System; Air-Cooled Thin-Film Arrays ($0.10/W); Building Equipped SC-2	398	32.3	6.25/	8.79	4.60/	8.08	136. /	152,	165./	181.	154./	176	272./	295

Summary description of system	Table number	Percent solar	Effective cost of solar energy (¢/kWh)		Levelized monthly cost of energy service			
			No credits	200/0 ITC	Projection 1 No credits	Projection 2 No credits	Projection 2 20% ITC	Projection 3 20% ITC
OMAHA SHOPPING CENTER								
Reference System								
Conv. Gas Heat, Hot Water, and Central Electric A/C (SC-1).	399	0.0	NA/ NA	NA/ NA	85./ NA	112./ NA	112./ NA	210./ NA
Systems compared to reference system								
Solar Hot Water; Flat-Plates (1977 Prices); SC-l	400	2.4	13.54/ 35.32	10.01/ 33.82	90./ 98.	116./ 124.	114./ 124.	211./ 221.
Solar Hot Water; Flat-Plates (Future Price); Se-l	401	2.4	8.26/ 28.87	6.10/ 27.95	87./ 96.	114./ 122.	113.l 121.	209./ 218,
Reference system								
Conv. Gas Heat, Gas Hot Water, and Absorption Chillers (SC-7).	402	0.0	NA/ NA	NA/ NA	79./ NA	108./ NA	108./ NA	189./ NA
Systems compared to reference system								
Conv. Gas Heat, Hot Water, and Double- Ef. feet Absorption Chilling (SC-7)	403	7.6	1.60/ 7.92	1.02/ 7.67	78./ 86.	104./ 112,	103./ 112,	181./ 190.
Solar Heating; Flat-Plates (1977 Prices), Low-Temp. Storage; SC-7	404	16.8	20.25/ 27.48	14,90/ 25.20	31./ 152.	153./ 174,	137./ 167.	212./ 242.
Solar Heating; Flat-Plates (Future Price); SC-7	405	16.8	12.73/ 18.27	9.33/ 16.83	09./ 125.	131./ 147.	121./ 143.	196./ 218.
100-Percent Solar Heating; Flat-Plates (1977 Prices), Seasonal Low-Temp. Storage; SC-7	406	27.8	19.43/ 25.41	14.33/ 23.23	61./ 190.	179./ 208.	154./ 197.	224./ 267.
Solar Heating; Flat-Plates (Future Price), Seasonal Low-Temp. Storage; SC-7 ., ...	407	27.8	12.21/ 16.57	8.99/ 15.20	26./ 148.	144./ 165.	128./ 158.	199./ 229.
Solar Heating; One-Axis Tracker (1977 Designs), Low-Temp. Storage; SC-7	408	15.3	23.69/ 31.46	18.02/ 29,04	136./ 156.	158./ 179.	143./ 172.	218./ 248.
Solar Heating; One-Axis Tracker (Future Design), Low-Temp. Storage; SC-7	409	11.3	11.73/ 18.00	8.97/ 16.82	- 97./ 109.	121.1 134.	116./ 131.	193./ 208.
Solar Heating and Cooling; One-Axis Tracker (Future Design) and Low-Temp. Storage; SC-7	410	26.3	13.27/ 17.73	10,07/ 16.36	129./ 149.	147./ 167.	132./ 161.	203./ 232.
Solar Heating; One-Axis Tracker (Future Design), Low-Temp. Storage; SC-7	411	92.8	3.64/ 4.86	2.78/ 4.49	88./ 108.	90./ 110.	77./ 104.	85./ 113,
Solar Heating and Cooling; One-Axis Tracker (Future Design), Seasonal Low-Temp. Storage; SC-7	412	27.8	10.41/ 14.21	7.89/ 13.13	118./ 136.	135./ 153.	123./ 148.	193./ 219.
Solar Engine Cogeneration; ORCS, One-Axis Tracker (Future Design), High-Temp. Storage; SC-7.	413	-1.8	● *****, •••••••	•••••••/• *****	196./ 229.	239./ 272.	210./ 260.	250./ 300.
Reference system								
Conv. All-Electric (SC-2)	414	0.0	NA/ NA	NA/ NA	96./ NA	126./ NA	126./ NA	247./ NA

Systems compared to reference system														
Solar Hot Water; Flat-Plates (1977 Prices); SC-2	415	6,6	4.18/	10.42	3,09/	9.95	97. /	105,	125./	133.	123./	132.	237./	246.
Solar Hot Water; Flat-Plates (Future Price); SC-2	416	6.6	33961	46.86	25.11/	43.08	1 35. /	152.	163.I	180.	152./	175.	265./	289.
Solar Heating; Flat-Plates (1977 Prices) and Low-Temp. Storage; SC-2	417	101	5131	973	3.79/	9.16	1 00, /	109.	27./	136.	124./	135	235./	245.
Solar Heating; Flat-Plates (Future Prices) and Low-Temp. Storage; SC-2	418	10.1	4,46/	9.01	3.15/	8.51	98. /	108.	26.I	135,	123./	134.	233.I	244.
Solar Heating; Flat-Plates (1977 Prices) and Low-Temp. Storage; SC-2	419	12,6	6.82/	11.09	5.06/	10.34	1 05, /	116	32./	142	127./	141.	236./	249.
Solar Heating; Flat-Plates (Future Prices) and Low-Temp. Storage: SC-2 ,.	420	126	4.42/	8.14	3.29/	7.66	99. /	108.	26./	135	123./	134.	231./	242.
100-Percent Solar Heating; Flat-Plates "(1977 Prices) and Seasonal Low-Temp. Storage; SC-2	421	24.2	11.31/	14.58	9.25/	13.69	1 33. /	149.	156./	172.	147./	168.	240./	262.
100-Percent Solar Heating; Flat-Plates (Future Prices) and Seasonal Low-Temp. Storage; SC-2	422	242	8.92/	11.64	7.47/	11.3	122./	135.	1 45. /	158.	138./	155.	232./	249.
PV System; Air-Cooied SI Arrays ($1/W)' SC-2.	423	46.5	8.53/	23.47	13.66/	21.40	237. /	283	255./	301.	211./	282.	284./	355.
PV System; Air-Cooled Si Arrays ($1/W), Battery Storage; SC-2	424	45.4	9.79/	24.92	14.68/	22.74	244./	290.	261./	307.	215./	288.	287./	360
PV System; Air-Cooled Si Array ($0.50/W); ' " SC-2	425	46.5	0.08/	13.12	7.43/	11.99	160./	188.	178./	206.	153./	195.	227./	269
PV System; Air-Cooled Thin-Film Arrays ($0.30/W); SC-2	426	25.2	3.53/	17.97	9.97/	1646	148./	170.	171./	193.	153./	186.	249./	281.
PV System; Air-Cooled Thin-Film Arrays ($0.10/W); SC-2	427	32.5	6.28/	8.78	4.62/	8.07	116./	132.	1 37. /	153.	126./	149.	213./	236.
PV System; Air-Cooled Thin-Film Arrays ($0.10/W) Battery Storage; SC-2. .,	428	32.3	6.47/	9.01	4.77/	8.29	116./	132.	138./	154.	127./	149.	213./	236.
PV Cogeneration; Two-Axis Concentrator With High Eff. Cells, Battery and Multitank Low-Temp. Storage, SC-2	429	63.1	6.09/	7.82	4.68/	7.23	127./	149.	139. /	161.	122./	154.	1 70. /	202.
PV Cogeneration; Two-Axis Concentrator With High Eff. cells, Multitank Low-Temp. Storage, SC-2	430	66.9	5 12/	6.70	3.89/	6.18	1 20. /	141.	132./	153,	116./	147.	1 66. /	196.
ALBUQUERQUE COMMUNITY														
Conventional systems														
Conv. Heating and Cooling Systems in Each Building: Mixture of Gas/Electric Hot Water, Gas/Heat-pump/Resistance Heating. and Electric Chilling	431	0.0	NA/	NA	NA/	NA	90./	NA	126./	NA	126./	NA	225./	NA
Conv. Heating and Cooling Systems in Each Building, All Use Electric Hot Water, Resistance Heating, Electric Cooling, and Utility Electricity	432	0.0	NA/	NA	NA/	NA	129./	NA	174. /	NA	174/	NA	357./	NA

Summary description of system	Table number	Percent solar	Effective cost of solar energy (¢/kWh)		Levelized monthly cost of energy Service			
			No credits	20% ITC	Projection 1 No credits	projection 2 No credits	Projection 2 20% ITC	Projection 3 20% ITC
Reference system								
Conv. Heating and Cooling Systems in Each Building; All Use Electric Hot Water and Cooling; the High Rises and Shopping Center Use Resistance Heating, Other Buildings Use Heat Pumps	433	0.0	NA/ NA	NA/ NA	125./ NA	164./ NA	164./ NA	325./ NA
Systems compared to reference system								
Conv. Engine Cogeneration; Oil-Burning Diesel/ORCS, Absorption and Electric Chillers	434	54.0	5.33/ 8.08	4.68/ 7.31	1 22./ 152	135./ 166.	128./ 157.	189./ 218.
Conv. Engine Cogeneration; Gas-Burning Diesel/ORCS, Absorption and Electric Chillers	G434	54.0	5.33/ 8.08	4.68/ 7.31	101 ./ 131.	118./ 148.	111./ 139.	126./ 155.
Conv. Engine Cogeneration; Coal Steam Turbines and Absorption and Electric Chillers.	435	41.7	9.18/ 13.85	8.02/ 12.45	125./ 165.	136./ 175.	126./ 164.	157./ 195.
100-Percent Solar Heating; l-Cover Pond, Seasonal Aquifer Storage, Electric Chillers, and Utility Electricity	436	54.7	6.67/ 9.86	5.90/ 8.94	140./ 175.	155./ 191.	147./ 181.	210./ 244.
100-Percent Solar Heating; l-Cover Pond, Seasonal Aquifer Storage, Electric Chillers, and Utility Electricity.	437	54.7	5.52/ 8.28	4.88/ 7.50	127./ 158.	143./ 173.	135./ 165.	199./ 228.
100-Percent Solar Heating; Flat-Plates (1977 Prices), Seasonal Low-Temp. Storage, Absorption Chillers, and Utility Electricity	438	67.0	7.82/ 11.90	6.81/ 10.68	157./ 213.	66./ 222.	153./ 205.	191./ 244.
100. Percent Solar Heating; Flat-Plates (Future Price), Absorption Chillers, Low-Temp. Storage, and Utility Electricity	439	66.9	5.71/ 8.90	4.93/ 7.96	128./ 172.	38./ 181.	127./ 168.	165./ 207.
Solar Engine Cogeneration; Steam Turbines, Heliostats, High- and Low-Temp. Storage, Absorption and Electric Chillers and Coal Backup	440	70.1	7.91/ 11.56	6.98/ 10.44	1 50./ 203.	56./ 208.	143./ 192.	158./ 208.
Solar Engine Cogeneration; Heliostats, Steam Turbines With Coal Superheat, High- and Low-Temp. Storage, Absorption and Electric Chillers, and Coal Backup.	441	66.4	7.75/ 11.37	6.831 10.26	144./ 193.	150./ 199.	137./ 184.	155./ 202.
Solar Engine Cogeneration; Two-Axis Dish, High Eff. Stirling Engines, High- and Low-Temp. Storage, Absorption and Electric Chillers, and Oil Backup.	442	91.4	6.05/ 8.71	5.38/ 7.92	146./ 96.	149./ 198.	137. / 184.	148./ 195.
Solar Engine Cogeneration; Two-Axis Dish, High Eff. Stirling Engines, High- and Low-Temp. Storage, Absorption and Electric Chillers, and Gas Backup.	G442	91.4	6.05/ 8.71	5.38/ 7.92	143./ 92.	146. / 195.	133. / 180.	136./ 183.

Solar Engine Cogeneration; Two-Axis Dish, Low Eff. Stirling Engines, High- and Low-Temp. Storage, Absorption and Electric Chillers, and 011 Backup.	443	90.4	6.63/	9.36	5.95/	8.54	157./	207.	159./	210.	147. /	195,	160. /	207.
Solar Engine Cogeneration; Two-Axis Dish, Low Eff. Stirling Engines, High- and Low-Temp. Storage, Absorption and Electric Chillers, and Gas Backup.	G443	90.4	6.63/	9.36	5.95/	8.54	152./	203.	156./	206.	43. /	191.	47. /	194.
100-Percent Solar Engine; Low-Temp. ORCS With River-Water Condenser, 2-Cover Pond, Seasonal Aquifer Storage, and Absorption Chillers	444	100.0	8.85/	12.33	7.95/	11.25	207./	278.	207./	278.	89./	256.	89. /	256.
100-Percent Solar Engine; Low-Temp. ORCS With Cooling Tower, 2-Cover Pond, Seasonal Aquifer Storage, and Absorption Chillers	445	100.0	11 .07/	15.28	9.96/	13.95	252./	338.	252./	338	230./	311	230. /	311.
100-Percent Solar PV Cogeneration; Two-Axis Concentrator With Si Cells (Med. Price), Seasonal iron-REDOX Electrical and Multitank Low-Temp. Storage, and Absorption Chillers (Minimum Collector Area)	446	100.0	9.34/	13.15	8.38/	12.00	217./	295.	217./	295.	198./	271.	98./	271
100-Percent Solar PV Cogeneration; Two-Axis Concentrator With Si Cells (Med. Price), Seasonal iron-REDOX Electrical and Multitank Low-Temp. Storage, and Absorption Chillers (Optimized Collector Area).	447	1000	7.88/	11.20	7.05/	10.19	188./	255,	188./	255.	171./	235.	71. /	235.
FORT WORTH COMMIUNITY														
Conventional systems														
Conv. Heating and Cooling Systems in Each Building; Mixture of Gas/Electric Hot Water, Gas/Heat-Pump/Resistance Heating, and Electric Chilling	448	0.0	NAI	NA	NAI	NA	117./	NA	158./	NA	158./	NA	294./	NA
Conv. Heating and Cooling Systems in Each Building; All Use Electric Hot Water, Resistance Heating, Electric Cooling, and Utility Electricity	449	0.0	NA/	NA	NA/	NA	145./	NA	193./	NA	193./	NA	392./	NA
Reference system														
Conv. Heating and Cooling Systems in Each Building: All Use Electric Hot Water and Electric Cooling; High Rises and Shopping Center Use Resistance Heating, Other Buildings Use Heat Pumps ., ...	450	0.0	NA/	NA	NA/	NA	148./	NA	194./	NA	194./	NA	381./	NA
Systems compared to reference system														
Conv. Engine Cogeneration; 011-Burning Diesel/ORCS, and Absorption and Electric Chillers ., ...	451	53.1	5.28/	8.24	4.61/	7.43	132./	166.	145./	179.	138./	170.	200./	232.
Conv Engine Cogeneratfin; Gas-Burning Diesel/ORCS, and Absorption and Electric Chillers	G451	53.1	5.28/	8.24	4.61/	7.43	113./	147.	133./	166.	125./	157.	143./	175.

Summary description of system	Table number	Percent solar	Effective cost of solar energy (¢/kWh)		Levelized monthly cost of energy service			
			No credits	20% ITC	Projection 1 No credits	Projection 2 No credits	Projection 2 20% ITC	Projection 3 20% ITC
Systems **compared to reference** *system—Continued*								
Conv. Engine Cogeneration; Coal Steam Turbines, and Absorption and Electric Chillers	452	37.6	1 0.37/ 15.92	9.01/ 14.29	141/ 186,	1 53./ 198.	142./ 185.	1 77./ 220.
Solar Engine Cogeneration; Steam Turbines, Heliostats, High- and Low-Temp. Storage, Absorption and Electric Chillers, and Coal Backup	453	65.8	9.89/ 14.46	8.73/ 13.07	187./ 251.	1 93./ 258.	177. / 238.	196. / 257.
Solar Engine Cogeneration; Steam Turbines With Coal Superheat, Heliostats, High- and Low-Temp. Absorption and Electric-Chillers, and Coal Superheat	454	62.5	9.62/ 14.16	8.47/ 12.79	1 77./ 238.	184./ 245.	169./ 227	190./ 248.
OMAHA COMMUNITY								
Conventional systems								
Conv. **Heating and Cooling Systems in Each Building; Mixture of Gas/Electric Hot Water, GaslHeat-Pump/Resistance Heating, and Electric** *Chilling*	455	0.0	NA/ NA	NA/ NA	98./ NA	1 33./ NA	133./ NA	235./ NA
Conv. Heating and Cooling Systems" in Each Building; All Use Electric Hot Water, Resistance Heating, Electric Cooling, and Utility Electricity	456	0.0	NA/ NA	NA/ NA	131 ./ NA	1 74./ NA	174./ NA	351./ NA
Reference system								
Conv. Heating and Cooling System in Each Building; All Use Electric Hot Water and Electric Cooling; *High Rises and Shopping Center Use Resistance Heating, Other Buildings Use Heat Pumps*	457	0.0	NA/ NA	NA/ NA	1 30./ NA	168./ NA	168./ NA	326./ NA
Systems compared to reference system								
Conv. District Heating; Central Oil Heat and Electric Chilling, and Utility Electrlcity	458	34.9	4,49/ 7.49	3.87/ 6.73	127./ 152.	149./ 174.	144./ 168.	237./ 261.
Conv. District Heating; Central Oil Heat and Electric Chilling, and Utility Electricity	G458	34.9	4.49/ 7.49	3.87/ 6.73	11 6./ 140,	140./ 164.	134./ 158.	203./ 226.
Conv. Engine Cogeneration, Oil-Burning Diesel/ORCS, Absorption and Electric Chillers	459	558	4.98/ 770	4,34/ 6.93	1 34./ 170.	147./ 183.	138./ 173	197./ 232.
Conv. Engine Cogeneration; Gas-Burning Diesel/ORCS, Absorption and Electric Chillers	G459	558	4.98/ 770	4.34/ 6.93	114/ 150.	1 30./ 166,	122./ 156.	137./ 171.
Conv. Engine Cogeneration; Coal Steam Turbines, Absorption and Electric Chillers	460	455	7.72/ 11 85	6.71/ 10.63	1 39./ 183.	150./ 194	139./ 181	173./ 215
100-Percent Solar Heating; l-Cover Pond, Seasonal Aquifer Storage, Electric Chillers, and Utility Electricity ...	461	60.1	7.29/ 1063	6.48/ 9.66	1 74./ 221.	188./ 236.	177. / 222	237./ 282.
100-Percent Solar Heating; Coal Steam Turbines, Absorption and Electric Chillers	461/437	601	7 01/ 1003	6.28/ 9.16	170./ 212.	184./ 227.	174./ 215	234./ 275

Solar Engine Cogeneration, Heliostats, Steam Turbines, High- and Low-Temp Storage, Absorption and Electric Chillers, and Coal Backup	462	677	8.83/	12.89	7.80/	11.65	188./	253.	195./	260.	178./	240.	198./	260.
Solar Engine Cogenerat'ion; Heliostats, Steam Turbines With Coal Superheat, High- and Low-Temp. Storage, Absorption and Electric Chillers, and Coal Backup	463	651	8.41/	12.37	7.41/	11.17	177./	238.	184./	245.	169./	227.	191./	248.
Solar Engine Cogeneration; Two-Ax Is Dish, High Eff. Stirling Engine, High- and Low-Temp Storage, Absorption and Electric Chillers, and 011 Backup. ., ...	464	875	7.42/	10.68	6.60/	9.70	197.I	264.	200./	268.	184./	248.	200./	264.
Solar Engine Cogeneration; Two-Axis Dish, High Eff. Stirling Engines, High- and Low-Temp. Storage, Absorption and Electric Chillers, and Gas Backup	G464	875	7.42/	10.68	6.60/	9.70	191./	258.	196./	263.	179./	243.	183./	247.
Solar Engine Cogeneration; Two-Axis Dish, Low Eff. Stirling Engines, High- and Low-Temp. Storage, Absorption and Electric Chillers, Oil Backup.	465	858	8.05/	11.39	7.22/	10.39	208.I	276.	212./	280.	195./	260.	214./	278.
Solar Engine Cogeneration; Two-Ax Is Dish, Low Eff. Stirling Engines, High- and Low-Temp. Storage, Absorption and Electric Chillers, Gas Backup	G465	858	8.05/	11.39	7.22/	10.39	202./	269.	207./	274.	190./	254.	195./	259.
100-Percent Heat Engine, LOW-Temp, ORCS With River Water Condenser, 2-Cover Pond, Seasona Aquifer Storage, and Absorption Chillers	466	100.0	10.45/	14.29	9.47/	13.11	280./	371.	280./	371.	257./	343.	257./	343.
100-Percent Solar Engine, Low-Temp. ORCS With Cooling Tower, 2-Cover Pond, Seasonal Aquifer Storage, Absorption Chillers	467	100.0	14.30/	19.54	12.91/	17.88	371./	495.	371./	495.	339./	456.	339./	456.
100-Percent solar PV Cogeneration; Two-Axis Concentrator With Si Cells (Med. Price), Seasonal Iron-REDOX Electrical and Multitank Low-Temp. Storage, Absorption Chillers (MInimum Collector Area)	468	1000	12.93/	18.06	11.63/	16.50	339./	460.	339./	460.	308./	423.	308./	423.
100-Percent Solar PV Cogeneration; Two-Axis Concentrator With Si Cells (Med. Price), Seasonal iron-REDOX Electrical and Multitank, Low-Temp. Storage, Absorption Chillers (Optlmlzed Collector Area).	469	100.0	11.09/	15.62	9.93/	14.23	296./	403	296./	403.	268./	370.	268./	370.
ALBUQUERQUE INDUSTRIAL														
Reference system														
Conv. Coal Boiler and Utility Electricity (Industrial Owner)	470	0.0	NA/	NA	NA/	NA	1744./	NA	2332./	NA	2332./	NA	4352./	NA
Systems compared to reference system														
Solar Process Heat (180° F), 2-Cover Pond, Low-Temp Storage, Coal Backup Boiler, and Utility Electricity (Industrial Owner)	471	17.9	11 06/	5.22	9.93/	4.67	2776./	2131.	3266./	2622.	3142./	2561	4871./	4290

Summary description of system	Table number	Percent solar	Effective cost of solar energy (¢/kWh)		Levelized monthly cost of energy service			
			No credits	200/0 ITC	Project Ion 1 No credits	Project ion 2 No credits	Project ion 2 20% ITC	Project ion 3 20%ITC
Systems **compared to reference** system—Continued								
Solar Process Preheat (180° F max), 2-Cover Pond, Low-Temp Storage, Coal Backup Boiler, and Utllity Electrlclty (Industrial Owner)	472	35.2	5.63/ 2.66	5.06/ 2.38	2593./ 1949.	2991./ 2346.	2866./2285	4316./ 3735.
Solar Process Heat (180° F), 2-Cover Pond, (Future Price). Low-Temp Storage, Coal Backup Boiler, and Utility Electrlclty (Industrlal Owner).	471/494	17.9	8.12/ 3.37	7.30/ 2.97	2451 ./ 1927.	2942./ 2417.	2852./2373.	4581. / 4103.
Solar Process Preheat (180° F max.); 2-Cover Pond, (Future Price), Low-Temp Storage, Coal Backup Boiler, and Utllity Electrlcity (Industrial Owner]	4721495	35.2	4.1 4/ 1.72	3.72/ 1,51	2269./ 1744.	2666./ 2142,	2576./2097.	4026. / 3547.
Solar Process Heat (180° F), Flat-Plates (1977 Prices), Low-Temp Storage, Coal Backup Boiler. and Utllity Electrlclty (Industnal (Owner)	473	35.6	17.66/ 9.46	15.63/ 8.45	5241 ./ 3441.	5636./ 3836.	5190./3617,	6633./ 5060.
Solar Process Heat (180 °F); Flat~Plate's (Future Price), Low-Temp Storage. Coal Backup .	4731497	35.6	11.37/ 5.72	10.06/ 5.07	3862./ 2622.	4257./ 3017.	3969./2876.	5413./ 4319.
Solar Process Heat (180" F), One-Axis Tracker (1977 Design), High-Temp Storage, Coal Backup Boiler, and Utility Electrlcity (Industrial Owner)	474	26.9	26.74/ 14.98	23.80/ 13.54	5885./ 3940.	6328./ 4382.	5842./4143.	7427. / 5728.
Solar Process Heat (350 °F), One-Axis Tracker (Future Design), High-Temp Storage, Coal Backup Boiler, and Utility Electricity (Industrial Owner)	475	25.3	13.10/ 6.70	11.69/ 6.00	3517./ 2520.	3968. / 2971.	3748./2862.	5359. / 4473.
Solar PV Cogeneration. Two-Ax Is Concentrators With GaAs Cells (Med. Price), Low-Temp. Storage, Coal Backup Boiler, and Utility Electric Backup (Industrial Owner)	476	0.0	NAI NA	NA/ NA	1468. / NA	2056./ NA	2056. / NA	4076./ NA
Solar PV Cogeneration; Two-Axis Concentrators With GaAs Cells (Low Price), Low-Temp. Storage, Coal Backup Boiler, and Utility Electric Backup (Industrial Owner)	477	17.9	5.36/ 7.72	4.90/ 7.16	1871 ./ 2131.	2362. / 2622.	231 1./2561.	4041. / 4290.
Reference system								
Conv. Coal Boiler and Utility Electricity (Municipal Utility Owner)	M470	44.7	10.51/ 5.59	9.34/ 5.02	4145. / 2790.	4499. / 3144.	4178./2986.	5417. / 4226.
Systems compared to reference system								
Solar Process Heat (180° F); 2-Cover Pond, Low-Temp. Storage, Coal Backup Boiler, and Utility Electricity (Municipal" Utility Owner).	M471	47.0	6.77/ 3.40	6.04/ 3.04	3181./ 2204.	3525./ 2548.	331 1./2443.	4501. / 3632,

Solar Process Preheat (180° F max.); 2-Cover, Low-Temp. Storage, Coal Backup Boiler, and Utlllty Electrlclty (Municipal Utlllty Owner).	M472	35.2	2.73/ 393	2.50/ 3.65	1689. / 1949.	2086. / 2346.	2035 /2285	3485 / 3735
Solar Process Heat (180 °F), 2-Cover Pond, " " (Future Price), LowTemp Storage, Coal Backup Boiler, and Utility Electrlclty (Municipal Utlllty Owner)	M471/494	17.9	3.98/ 5.87	3.65/ 546	1718.1 1927	2209 / 2417.	2172.12373	3902 / 4103
Solar Process Preheat (180° F max.); 2-Cover Pond (Future Price), Low-Temp. Storage, Coal Backup Boiler, and Utility Electriclty (Municipal Utility owner) ., ...	M472/495	35.2	2031 2.99	1 .86/ 2.78	1536./ 1744.	1934. / 2142	1897./2097	3347 I 3547
Solar Process Heat (180° F); Flat-Plates (1977 Prices), Low-Temp. Storage, Coal Backup Boiler, and Utility Electrlclty (Munlclpal Utility Owner)	M473	35.6	730/ 10.71	6.47/ 9.71	2693.1 3441.	3088.1 3836.	290613617	4349 / 5060
Solar Process Heat (180° F); Flat-Plates (Future Price), Low-Temp. Storage, Coal Backup Boiler, and Utillty Electrlclty (Municipal UtilitV Owner)	M473/497	356	4.67/ 6.98	4.13/ 6.33	2115.I 2622.	2511 / 3017	2393.12876.	3836.1 4319.
Solar Process Heat (350 °F); One-Axis Tracker (Future Design), High-Temp. Storage, Coal Backup Boiler, and Utlllty Electricity (Municipal Utility Owner)	M474	26.9	11 .77/ 16.65	10.57/ 15.21	3132.I 3940.	3575. / 4382	3376 /4143.	4961 I 5728
Solar **Process Heat (350"); One-Axis Tracker (1977 Design), High-Temp. Storage, Coal Backup Boiler, and Utility Electricity** (industrial Owner).	M475	25.3	5.87/ 8.47	5.301 7.77	2116. / 2520.	2567. / 2971.	2477./2862.	4087 f 4473.
Solar PV Cogeneration; Two-Axis Concentrators With GaAs Cells (Medium Price), Low-Temp. Storage, Coal Backup Boiler, and Utility Electric Backup (Municipal Utility Owner).	M476	44.7	4.57/ 6.59	4.10/ 6.02	2233./ 2790	2587. / 3144.	2456./2986.	3695. / 4226.
Solar PV Cogeneration; Two-Axis Concentrators With GaAs Cells (Low Price), Low-Temp. Storage, Coal Backup Boiler, and Utility Electric Backup (Municipal Utility Owner).	M477	47.0	3.00/ 4.35	2.70/ 399	1812./ 2204	2155. / 2548.	2068./2443.	3257. / 3632.
Reference system								
Conv. Engine Cogeneration; Coal-Burning Steam Turbine (Industrial Owner)	478	0.0	NA/ NA	NA/ NA	1786. / NA	2269./ NA	2269./ NA	3719. / NA
Systems compared to reference system								
Solar Engine Cogeneration; Heliostat, Steam Turbines, High-and Low-Temp. Storage, and Coal Backup (Industrial Owner)	479	47.4	1 1.09/ 5.40	9.89/ 4.81	4237. / 2748.	4491 ./ 3002.	4177./2848.	4940. / 3610.
Reference system								
Conv. Engine Cogeneration; Coal-Burning Steam Turbine (Municipal Utility Owner)	M478	0.0	NA/ NA	NA/ NA	1315. / NA	1799. / NA	1799. / NA	3249, / NA
Systems compared to reference system								
Solar Engine Cogeneration; Heliostats, Steam Turbines, High- and Low-Temp. Storage, and Coal Backup (Municipal Utility Owner) .	M479	47.4	4.93/ 7.19	4.44/ 6.60	2155. / 2748.	2409./ 3002.	2281./2848.	3043. / 3610.

Summary descrlption of system	Table number	Percent solar	Effective cost of solar energy (¢/kWh)		Levelized monthly cost of energy service			
			No credits	200/0 ITC	Project lon 1 No credits	Projection 2 No credits	Projection 2 20% ITC	Pro]ectlon 3 20% ITC
Reference system								
Conv. Oil Boiler and Utllity Electricity (industrial Owner). . . . . .,	480	0.0	NA/ NA	NA/ NA	2228./ NA	3028./ NA	3028./ NA	6594./ NA
Systems **compared to reference system**								
Solar Process Heat (180° F); 2-Cover Pond, Low-Temp. Storage, Oil Backup Belier, and Utility Electricity (Industrial Owner)	481	17.9	11 .04/ 6.80	9.91/ 6.25	3018./ 2550.	3662. / 3195.	3538./3133.	6383./ 5979,
Solar Process Preheat (180" F max.); 2-Cover Pond Collector, Low-Temp. Storage, Oil Backup Boiler, and Utility Electricity (industrial Owner).	482	35.2	5.62/ 3.47	5.05/ 3.18	2605. / 2137.	3100./ 2632.	2975./2571.	5127./ 4722.
Solar Process Heat (180° F); 2-Cover Pond (Future Price), Low-Temp. Storage, Oil Backup Boiler, and Utility Electricity (industrial Owner).	481/507	17.9	8.10/ 4.95	7.28/ 4.55	2693./ 2345.	3338./ 2990.	3248./2946.	6093. / 5791.
Solar Process Preheat (180° F max.); 2-Cover Pond (Future Price), Low-Temp. Storage, Oil Backup Boiler, and Utility Electricity (In- . dustrial Owner).	482/508	35.2	4.13/ 2.52	3.71/ 2.32	2281./ 1933.	2775./ 2427.	2685./2383,	4837./ 4535.
Solar **Process Heat (180° F); Flat-Plates (1977 Prices), Low-Temp. Storage, Oil Backup Boiler, and Utility Electricity (Industrial** Owner).	483	35.6	17.66/ 10.26	15.63/ 9.26	5249. / 3625.	5740. / 4116.	5294./3897.	7429. / 6032.
Solar Process Heat (180° F); Flat-Plates (Future Price), Low-Temp. Storage, Oil Backup Boiler, and Utility Electricity (industrial Owner).	483/510	35.6	11 .36/ 6.51	10.05/ 5.87	3868./ 2805.	4359./ 3296.	4072./3154,	6207./ 5289.
Solar Process Heat (350° F); One-Axis Tracker (1977 Design), High-Temp. Storage, Oil Backup Boiler, and Utility Electricity (Industrlal Owner).	484	26.9	26.74/ 16.05	23.80/ 14.60	601 1./ 4241.	6577. / 4807.	6091./4568.	8577. / 7054.
Solar Process Heat (350° F); One-Axis Tracker (Future Design), High-Temp. Storage, Oil Backup Boiler, and Utility Electricity (industrial Owner).	485	25.3	13.1 0/ 7.83	11 .69/ 7.13	3663./ 2842.	4244, / 3422.	4024./3314.	6574. / 5864.
Solar PV Cogeneration: Two-Axis Concentrators With GaAs Cells (Med. Price), Low-Temp. Storage, 011 Backup Boiler, and Utlllty Electrlc Backup (Industrial Owner). ., .,	486	44.7	10.51 / 6.23	9.34/ 5.66	4234. / 3055.	4704. / 3525.	4383./3367.	6460. / 5444.
Solar PV Cogeneration; Two-Axis Concentrators With GaAs Ceils (Low Price), Low-Temp. Storage, 011 Backup Boiler, and Utlllty Electric Backup (Industrial Owner), ...	487	47.0	6.77/ 4.01	6.04/ 3.65	3288./ 2487.	3752./ 2950.	3538./2845.	5597./ 4904.

Reference system								
Conv. Oil Boiler and Utlllty Electrlclty (Munlclpal Utlllty Owner)	M480	0 0	NA/ NA	NAI NA	2187 I NA	2988 I NA	2988 I NA	6553 / NA
Systems compared to reference system								
Solar Process Heat (180" F), 2-Cover Pond, Low-Temp. Storage, Oil Backup Boiler, and Utlllty Electriclty (Municipal Utlllty Owner)	M481	179	5.36/ 717	4.90/ 661	2350. / 2550,	2995 / 3195	2944 /3133	5789 I 5979
Solar Process Preheat (180° F max), 2-Cover Pond, Low-Temp. Storage, Oil Backup Boiler, and Utlllty Electriclty (Munlclpal Utility Owner) .	M482	352	2 73/ 365	2.49/ 337	1937 / 2137	2432. / 2632.	2381 /2571	4533 I 4722
Solar Process Heat (180° F); 2-Cover Pond (Future Price), Low-Temp Storage, 011 Backup Boiler, and Utlllty Electrlclty (Munlclpal Utlllty Owner)	M481/507	179	3.97/ 532	3.64/ 491	2197 I 2345	2842. / 2990	2805./2946	5650 / 5791
Solar Process Preheat (180° F max.); 2-Cover Pond (Future Price), LowTemp. Storage, Oil Backup Boiler, and Utlllty Electrlclty (Munlclpal Utility Owner)	M482/508	35.2	2.02/ 2.71	1.85/ 2.50	1785 / 1933.	2279./ 2427.	2242./2383.	4394./ 4535.
Solar Process Heat (180° F): Flat-Plates (1977 Prices), LowTemp. Storage, Oil Backup Boiler, and Utlllty Electrlclty (Munlclpal Utlllty Owner).	M483	35.6	7.30/ 10.44	6.47/ 9.44	2937. / 3625.	3428./ 4116.	3245./3897.	5380./ 6032.
Solar Process Heat (180" F); Flat-Plates (Future Price), Low-Temp. Storage, Oil Backup Boiler, and Utlllty Electricity (Munlclpal Utility Owner)	M483/51O	35.6	4.66/ 6.70	4.13/ 6.05	2358./ 2805.	2849./ 3296.	2731./3154.	4867./ 5289.
Solar Process Heat (350° F); One-Axis Tracker (1977 Design), High-Temp. Storage, 011 Backup Boiler, and Utlllty Electncity (Municipal Utility Owner)	M484	26.9	11.77/ 16.29	10.57/ 14.85	3493./ 4241.	4060./ 4807.	3861 ./4568.	6347./ 7054.
Solar Process Heat (350° F); One-Axis Tracker (Future Design), High-Temp. Storage, Oil Backup Boiler, and Utility Electric Backup (Munlclpal Utility Owner)	M485	25.3	5.87/ 8.09	5.30/ 7.39	2497./ 2842.	3078./ 3422.	2988./3314.	5538./ 5864.
Solar PV Cogeneration; Two-Axis Concentrators With GaAs Cells (Med. Price), Low-Temp. Storage, Oil Backup Boiler, and Utility Electric Backup (Municipal Utility Owner) .,	M486	44.7	4.57/ 6.38	4.10/ 5.81	2558./ 3055.	3028./ 3525.	2897./3367.	4973./ 5444.
Solar PV Cogeneration; Two-Axis Concentrators With GaAs Cells (Low Price), Low-Temp. Storage, Oil Backup Boiler, and Utility Electrlc Backup (Municipal Utllity Owner)	M487	47.0	3.00/ 4.15	2.70/ 3.79	2154./ 2487.	2617./ 2950.	2530./2845.	4588./ 4904.
Conventional oil systems								
Conv. Engine Cogeneration; Industry Using Oil-Burning Diesel (Industrial Owner)	488	0.0	NAI NA	NA/ NA	2319. / NA	2981./ NA	2981, / NA	6036. / NA
Conv. Engine Cogeneration; Oil-Burning Diesel (Municipal Utility Owner)	M488	0.0	NA/ NA	NA/ NA	2082./ NA	2744./ NA	2744./ NA	5799. / NA

Summary description of system	Table number	Percent solar	Effective cost of solar energy (¢/kWh)		Levelized monthly cost of energy service			
			No credits	200/0 ITC	Projection 1 No credits	Projection 2 No credits	Projection 2 20% ITC	Projection 3 20%ITC
Reference system								
Conv. Engine Cogeneration; Oil-Burning Stirling Engine (Industrial Owner)	489	0.0	NA/ NA	NA/ NA	2254./ NA	2890./ NA	2890./ NA	5822./ NA
Systems compared to reference system								
Solar Engine Cogeneration; Two-Axis Dish, Stirling Engines, High- and Low-Temp. Storage, and Oil Backup (Industrial Owner).	490	52.4	14.17/ 8.22	12.63/ 7.46	4680./ 3278.	4983./ 3580.	4618./3400.	6012./ 4795.
Reference system								
Conv. **Engine Cogeneration; Oil-Burning Stir-** *ling (Municipal Utility Owner).*	M489	0.0	NA/ NA	NA/ NA	2135./ NA	2770./ NA	2770./ NA	5702./ NA
Systems compared to reference system								
Solar Engine Cogeneration; Two-Axis Dish, Stirling Engines, High- and Low-Temp. Storage, and Oil Backup (Municipal Utility Owner).	M490	52.4	6.24/ 8.73	5.61/ 7.97	2691./ 3278.	2994./ 3580.	2844./3400.	4238./ 4795.
Reference system								
Conv. Gas Boiler and Utility Electricity (industrial Owner).	G480	0.0	NA/ NA	NA/ NA	1342./ NA	2279./ NA	2279./ NA	3898.1 NA
Systems compared to reference system								
Solar *Process Heat (180° F); 2-Cover Pond, Low-Temp. Storage, Gas Backup Boiler, and Utility Electricity (Industrial Owner)*	G481	17.9	1 1.04/ 6.80	9.91/ 6.25	2379./ 1911,	3121./ 2653.	2997./2592.	4437./ 4033.
Solar Process Preheat (180° F max.); 2-Cover Pond, Low-Temp. Storage, Gas Backup Boiler, and Utility Electricity (Industrial Owner).	G482	35.2	5.62/ 3.47	5.05/ 3.18	2203./ 1735.	2759./ 2291.	2635./2230.	3903./ 3498.
Solar Process Heat (180° F); 2-Cover Pond (Future Price), Low-Temp. Storage, Gas Backup Boiler, and Utility Electricity (industrial Owner).	G481/507	17.9	8.10/ 4.95	7.28/ 4.55	2054./ 1706.	2797./ 2449.	2707./2405.	4147./ 3845.
Solar *Process Preheat (180° F max.); 2-Cover Pond (Future Price), Low-Temp. Storage, Gas Backup Boiler, and Utility Electricity (Industrial Owner)*	G482/508	35.2	4.13/ 2.52	3.71/ 2.32	1879./ 1531.	2435./ 2087.	2345./2042.	3613./ 3311.
Solar Process Heat (180° F); Flat-Plates (1977 Prices), Low-Temp. Storage, Gas Backup Boiler, and Utility Electricity (Industrial Owner).	G483	35.6	17.66/ 10.26	15.63/ 9.26	4853./ 3229.	5404./ 3780.	4958./3561.	6222./ 4825.
Solar Process Heat (180° F); Flat-Plates (Future Price), Low-Temp. Storage, Gas Backup Boiler, and Utility Electricity (Industriai Owner).	G483/510	35.6	11.36/ 6.51	10.05/ 5.87	3472./ 2408.	4024./ 2960.	3736./2819.	5000./ 4082.

Solar Process Heat (350° F); One-Axis Tracker (1977 Design), High-Temp. Storage, Gas Backup Boiler, and Utlllty Electrlclty (Industrial Owner). ...	G484	26.9	26.74/	16.05	23.80/	14.60	5494.1	3724.	6140./ 4370.	5654./4131 7005./ 5482.
Solar Process Heat (350" F); One-Axis Tracker (Future Design), High-Temp. Storage, Gas Backup Boiler, and Utlllty Electricity (Industrlal Owner). ...	G485	25.3	13.10/	7.83	11.69/	7.13	3125./	2303.	3788./ 2967.	3568.12858. 4935.1 4225.
Solar PV Cogeneratlon; Two-Axls Concentrators With GaAs Cells (Med. Price), Low-Temp. Storage, Gas Backup Boiler, and Utlllty Electrlc Backup (Industrial Owner) . .	G486	44.7	10.51/	6.23	9.34/	5.66	3755.1	2576.	4298. / 3119	3977./ 2961. 4999. / 3983
Solar PV Cogeneratlon; Two-Ax ls Concentrators With GaAs Cells (Low Price), Low-Temp. Storage, Gas Backup Boiler, and Utlllty Electric Backup (Industrial Owner) .,	G487	47.0	6.77/	4.01	6.04/	3.65	2791.1	1989	3330, / 2529	31 17./2424. 4081. / 3388.
Reference system										
Conv. Gas Boiler and Utility Electr!clty (Munlcipal Utility Owner) ., ...	MG480	0.0	NA/	NA	NAI	NA	1302. /	NA	2238. / NA	2238./ NA 3858. / NA
Systems compared to reference system										
Solar Process Heat (180° F); 2-Cover Pond, Low-Temp. Storage, Gas Backup Boiler, and Utillty Electrlclty (Munlclpal Utility Owner).	MG481	17.9	5.36/	7.17	4.90/	6.61	1711./	1911.	2453./ 2653.	2403./2592. 3843. / 4033.
Solar Process "Preheat (180° F max.); 2-Cover Pond, LowTemp. Storage, Gas Backup Boiler, and Uttltty Electrlclty (Munlclpal Utllty Owner) ., ...	MG482	35.2	2.73/	3.65	2.49/	3.37	1535./	1735.	2091./ 2291.	2040 /2230. 3309,/ 3498.
Solar Process Heat (180° F); 2-Cover Pond (Future Price), Low-Temp.Storage, Gas Backup Boiler, and Utility Electricity (Munlclpal Utility Owner)	MG481/507	17.9	3.97/	5.32	3.64/	4.91	1558. /	1706.	2301./ 2449.	2264./2405. 3704./ 3845.
Solar Process Preheat (180° F max.); 2-Cover Pond (Future Price, Low-Temp. Storage, Gas Backup Boiler, and Utllty Electricity (Municipal Utillty Owner)	MG482/508	35.2	2.02/	2.71	1.85/	2.50	1383./	1531.	1939. / 2087.	1902./2042. 3170. / 3311.
Solar Process Heat (180° F); Flat-Plates (1977 Prices), Low-Temp. Storage, Gas Backup Boiler, and Utility Electricity (Municipal Utility Owner)	MG483	35.6	7.30/	10.44	6.47/	9.44	2540. /	3229.	3092./ 3780.	2909./3561 4173./ 4825.
Solar Process Heat (180° F); Flat-Plates (Future Price), Low-Temp. Storage, Gas Backup Boiler, and Utility Electrlclty (Municipal Utility Owner)	MG483/510	35.6	4.66/	6.70	4.1 3/	6.05	1962. /	2408.	2514. / 2960.	2396./2819. 3660. / 4082.
Solar Process Heat (350 °F); One-Axis Tracker (1977 Design), High-Temp. Storage, Gas Backup Boiler, and Utility Electricity (Municipal Utility Owner)	MG484	26.9	11 .77/	16.29	1 0.57/	14.85	2977. /	3724.	3622./ 4370.	3423./4131 4775. / 5482
Solar Process Heat (350° F); One-Axis Tracker (Future Design), High-Temp. Storage, Gas Backup, Boiler, and Utility Electricity (Municipal utility Owner)	MG485	253	5.87/	8.09	5.30/	7.39	1959, /	2303.	2622. / 2967.	2532./2858. 3899. / 4225.

Summary descriptlin of system	Table number	Percent solar	Effective cost of solar energy (¢/kWh)		Levelized monthly cost of energy service			
			No credit S	20% ITC	Projection 1 No credits	Project Ion 2 No credits	Project Ion 2 20% ITC	Projection 3 20%ITC
Systems compared to reference system—Continued								
Solar PV Cogeneration; Two-Axis *Concentrators With GaAs Cells (Med.* **Price), Low-Temp. Storage, Gas Backup Boiler, and Utility Electric Backup (Municipal Utility** *Owner)*	MG486	44.7	4.57/ 6.38	4.1 0/ 5.81	2079./ 2576.	2622./ 3119.	2490./2961.	3513. / 3983.
Solar **PV Cogeneration; Two-Axis** *Concentrators With GaAs Cells (Low Price), Low-Temp. Storage, Gas Backup Boiler, and Utility Electric Backup (Municipal Utility Owner)*	MG487	47.0	3.00/ 4.15	2.70/ 3.79	1656. / 1989.	2196./ 2529.	210912424	3073.I 3388.
Conventional gas systems								
Conv. Engine Cogeneration; Gas-Burning Diesel (Industrial Owner)	G488	0.0	NA/ NA	NA/ NA	1275. / NA	2097./ NA	2097. / NA	2857./ NA
Conv. Engine Cogeneration; Gas-Burning Diesel (Municipal Utility Owner)	MG488	0.0	NAI NA	NA/ NA	1037. / NA	1859. / NA	1859. / NA	2619. / NA
Reference system								
Conv. Engine Cogeneration; Gas-Burning Stlr-ling Engine (Industrial Owner)	G489	0 0	NA/ NA	NA/ NA	1252. / NA	2041 ./ NA	2041. / NA	2770 / NA
Systems compared to reference system								
Solar Engine Cogeneration; Two-Axis Dish, Stirling Engines, High- and Low-Temp. Storage, and Gas Backup (Industrial Owner).		52.4.	4.17/ 8.22	12.63/ 746	4204./ 2801	4579. / 3176.	4214./2997	4561. / 3344,
Reference system								
Conv. Engine Cogeneration; Oil-Burning Stir-ling Engine (Municipal Utility Owner)	**MG489**	0.0	NA/ NA	NA/ NA	1133./ NA	1922./ NA	1922./ NA	2651./ NA
Systems compared to reference system								
Solar Engine Cogeneration; Two-Axis Dish, Stirling Engines, High- and Low-Temp. Storage, and Oil Backup (Municipal Utility Owner)	**MG490**	52.4	6.24/ 8.73	5.61/ 7.97	2215./ 2801.	2590./ 3176.	2441./2997.	2787./ 3344.
OMAHA INDUSTRIAL								
Reference system								
Conv. Coal Boiler and Utility Electricity (industrial Owner)	491	0.0	NA/ NA	NAI NA	1813. / NA	2429. / NA	2429./ NA	4563./ NA

Systems compared to reference system								
Solar Process Heat (180° F) 2-Cover Pond Low-Temp Storage, Coal Backup Boiler, and Utllty Electrlclty (Industrial Owner)	492	168	18.27/ 973	16 41/ 881	3530 I 2644	4054 / 3168	3861 /3073	5722 / 4935
Solar Process preheat (180 °F max) 2-Cover Pond, Low-Temp Storage, Coal Backup Boiler, and Utllty Electrlclty (Industrial Owner)	493	253	12.13/ 646	10 90/ 585	3440. / 2554.	3918 / 3032.	3725 /2937	5449. / 4661.
Solar Process Heat (180° F). 2-Cover Pond (Future Price), Low-Temp Storage Coal Backup Boiler. and Utllty Electricity (industrial Owner).	494	168	13.36/ 6.63	12.02/ 5.97	3020. / 2323	3545. / 2847.	3406./2779	5267. / 4640
Solar process Preheat (180° F max.); 2-Cover Pond (Future Price), Low-Temp. Storage, Coal Backup Boiler, and Utility Electricity (Industrial Owner) ., ... , ...	495	253	8.87/ 4.40	7 98/ 396	2930. / 2233.	3409. / 2711.	3270 /2643.	4993. / 4366.
Solar Process Heat (180° F); Flat-Plates (1977 Prices), Low-Temp. Storage, Coal Backup Boiler, and Utility Electricity (Industrial Owner).	496	24.3	40.57/ 22.49	35.90/ 20.20	7636./ 4926.	8120. / 5411	7420./5066	9159. / 6806
Solar Process Heat (1800 F); Flat-Plates (Future Price), Low-Temp. Storage, Coal Backup Boiler, and Utility Electrlclty (industrial Owner).	497	24.3	26.07/ 13.88	23.06/ 12.40	5462./ 3635.	5946./ 4119.	5496./3898.	7235./ 5637
Solar Process Heat (3500 F); One-Axis Tracker (1977 Design), High-Temp, Storage, Coal Backup Boiler, and Utillty Electrlclty (industrial Owner)	498	24.5	49.12/ 28.51	43,74/ 25.86	8963. / 5854.	9446./ 6337.	8634./5938.	*****/ 7675
Solar Process Heat (350° F): One-Axis Tracker (Future Design), High-Temp. Storage, Coal Backup Boiler, and Utllty Electricity (industrial Owner), ...	499	25.3	23.64/ 13.11	21.09/ 11.85	5231. / 3589.	5710./ 4068.	5312./3872.	7036./ 5596.
PV Cogeneration System; Two-Axis Concentrators With GaAs Cells (Med. Price), Low-Temp. Storage, Coal Backup Boiler, and Utility Electrlc Backup (Industrial owner) . .	500	49.3	17.80/ 10.06	15.83/ 9.09	6608./ 4254.	6938./ 4584.	6340./4290.	7497, / 5448
PV Cogeneratlon; Two-Axis Concentrators With GaAs Cells (Low price), Low-Temp. Storage Coal Backup Boiler, and Utility Electric Backup (Industrial Owner)	501	51.9	11.43/ 6.29	10.19/ 5.68	4802./ 3159.	51 14./ 3471.	471 7./3276.	5792./ 4350.
Reference system								
Conv. Coal Boiler and Utility Electricity (Municipal Utility Owner)	M491	0.0	NA/ NA	NA/ NA	1538. / NA	2153./ NA	2153./ NA	4287. / NA
Systems compared to reference system								
Solar Process Heat (180° F); 2-Cover Pond, Low-Temp. Storage, Coal Backup Boiler, and Utility Electricity (Municipal Utility Owner).	M492	16,8	8.89/ 2.39	8.13/ 11.47	2281. / 2644.	2806./ 3168.	2727 /3073	4588. / 4935.
Solar Process Preheat (180 °F max.); 2-Cover Pond Collector, Low-Temp. Storage, Coal Backup Boiler, and Utility Electricity (Municipal Utility owner)	M493	25.3	5.90/ 8.22	5.40/ 7.62	2191 / 2554.	2670 / 3032	2591 ./2937	4314./ 4661.

Summary description of system	Table number	Percent solar	Effective cost of solar energy (¢/kWh)		Levelized monthly cost of energy service			
			No credits	200/0 ITC	Projection 1 No credits	Projection 2 No credits	Projection 2 20%ITC	Projection 3 20% ITC
Systems compared to reference system—Continued								
Solar Process Heat (1800 F); 2-Cover Pond (Future Price), Low-Temp. Storage, Coal Backup Boiler, and Utility Electricity (Municipal Utility *Owner)*	M494	16.8	6.571 9.29	6.02/ 8.63	2041./ 2323.	2566./ 2847.	2509./2779.	4370./ 4640.
Solar Process Preheat (180° F max.); 2-Cover Pond (Future Price), Low-Temp. Storage, Coal Backup Boiler, and Utility Electricity (Municipal Utility *Owner)*	M495	25.3	4.37/ 6.17	4.00/ 5.73	1951. / 2233.	2430./ 2711.	2373./2643.	4096./ 4366.
Solar Process Heat (180° F); Flat-Plates (1977 Prices), Low-Temp. Storage, Coal Backup Boiler, and Utility Electricity (Municipal Utility Owner)	M496	24.3	16.77/ 24.33	14.86/ 22.04	3794./ 4926	4278./ 5411.	3991./5066.	5731./ 6806
Solar Process Heat (180° F); Flat-Plates (Future Price), Low-Temp. Storage, Coal Backup Boiler, and Utility Electricity (Municipal Utility *Owner)*	M497	24.3	10.70/ 15.72	9.47/ 14.24	2884./ 3635.	3368. / 4119.	3183./3898.	4923./ 5637.
Solar Process Heat (350° F); One-Axis Tracker (1977 Design), High-Temp. Storage, Coal Backup Boiler, and Utility Electricity (Municipal Utility Owner)	M498	24.5	21.71/ 30.34	19.50/ 27.69	4553./ 5854.	5036./ 6337.	4703./5938.	6441 ./ 7675.
Solar Process Heat (350° F); One-Axis Tracker (Future Design), High-Temp. Storage, Coal Backup Boiler, and Utility Electricity (Municipal Utility *Owner)*	M499	25.3	10.57/ 14.88	9.53/ 13.62	2918./ 3589.	3397./ 4068.	3234./3872.	4958.1 5596.
PV Cogeneration; Two-Axis Concentrators With GaAs Cells (Med. Price), Low-Temp. Storage, Coal Backup Boiler, and Utility Electric Backup (Municipal Utility Owner) . .	M500	49.3	7.75/ 10.96	6.95/ 10.00	3278./ 4254.	3608./ 4584.	3363./4290.	4521./ 5448.
PV Cogeneration; Two-Axis Concentrators With GaAs Cells (Low Price), Low-Temp. Storage, Coal Backup Boiler, and Utility Electric Backup (Municipal Utility Owner) . .	M501	51.9	5.06/ 7.15	4.56/ 6.54	2491./ 3159.	2803./ 3471.	2641 ./3276.	3715./ 4350.
Reference system								
Conv. Engine Cogeneration; Coal-Burning Steam Turbine (Industrial Owner)	502	0.0	NA\ NA	NA/ NA	1786. / NA	2269. / NA	2269./ NA	3719. / NA
Systems compared to reference system								
Solar Engine Cogeneration; Heliostats, Steam Turbines, High- and Low-Temp. Storage, and Coal Backup (Industrial Owner)	503	449	18.79/ 10.03	16.76/ 9.03	6015./ 3845.	6281 / 4111	5779./3864	6578. / 4662.
Reference system								
Conv. Engine Cogeneration; Coal-Burning Steam Turbine (Municipal Utility Owner) . . .	M502	0.0	NA/ NA	NA/ NA	1315. / NA	1799. / NA	1799. / NA	3249. / NA

Systems compared to reference system								
Solar Engine Cogeneration; Heliostats, Steam Turbines, High- and Low-Temp. Storage, and Coal Backup (Municipal Utility Owner).	M503	449	8.39/ 1193	7.56/ 10.93	2970 I 3845	3236 / 4111	3030 /3864	3829./ 4662
Reference system								
Conv. Oil Boiler and Utility Electricity (industrial **Owner).**	504	0 0	NA/ NA	NAI NA	2088. / NA	2840. / NA	2840. / NA	6167./ NA
Systems compared to reference system								
Solar Process Heat (180° F); 2-Cover Pond, Low-Temp. Storage, Oil Backup Boiler, and Utility Electricity (Industrial Owner)	505	168	18.27/ 1142	16.41/ 10.50	3634. / 2924.	4260.I 3549.	4067./3454.	6810 I 6197
Solar Process Preheat (180° F max.); 2-Cover Pond, Low-Temp. Storage, Oil Backup Boiler, and Utility Electricity (Industrial Owner)	506	25.3	1 2.13/ 7.58	10.90/ 6.98	3458./ 2748.	4020. / 3309	3827./3214	6274. / 5662.
Solar Process Heat (180° F); 2-Cover Pond (Future Price), Low-Temp. Storage, Oil Backup Boiler, and Utility Electricity (industrial Owner)	507	16.8	13.36/ 8.32	12.02/ 7.66	3125./ 2602.	3750. / 3228.	3611 /3160	6354. / 5903
Solar Process Preheat (180° F max.); 2-Cover Pond (Future Price), Low-Temp. Storage, Oil Backup Boiler, and Utility Electricity (industrial Owner)	508	25.3	8.87/ 5,53	7.98/ 5.09	2949./ 2427.	3510.I 2988.	3371 ./2920.	5819./ 5367
Solar Process Heat (180° F); Flat-Plates (1977 Prices), Low-Temp. Storage, Oil Backup Boiler, and Utility Electricity (Industrial Owner)	509	243	40.56/ 23.66	35.89/ 21.36	7662. / 5130.	8231./ 5699.	7531 ./5355	'***'I 7838
Solar Process Heat (180° F); Flat-Plates (Future Price), Low-Temp. Storage, Oil Backup Boiler, and Utility Electricity (industrial Owner)	510	243	26 08/ 15.05	23.07/ 13.57	5493./ 3841	6063. / 4410.	5612./4188.	8094./ 6671
Solar Process Heat (350° F); One-Axis Tracker (1977 Design), High-Temp. Storage, Oil Backup Boiler, and Utility Electricity (industrial Owner)	511	24.5	49.11/ 9.67	43.73/ 27.02	8987./ 6056,	9556. / 6624.	8744./6225.	● ***" I 8702,
Solar Process l-teat (350 °F); One-Axis Tracker (Future Design), High-Temp. Storage, Oil Backup Boiler, and Utility Electricity (industrial Owner)	512	25.3	23 63/ 4.23	21.07/ 12.97	5247. / 3782.	5809./ 4344.	5412./4148.	7860./ 6597.
PV Cogeneration; Two-Axis Concentrators With GaAs Cells (Med. Price), Low-Temp. Storage, oil Backup Boiler, and Utility Electric Backup (Industrial Owner)	513	49.3	17 79/ 10.63	15,82/ 966	6556. / 4379.	6955./ 4778	6357./4484	8114 / 6241
PV Cogeneration; Two-Axis Concentrators With GaAs Cells (Low Price), Low-Temp. Storage, Oil Backup Boiler, and Utility Electric Backup (Industrial Owner)	514	51.9	11 .42/ 6.84	10,18/ 6.23	4765. / 3298	5149./ 3682	4752 /3487	6453./ 5188.

Summary description of system	Table number	Percent solar	Effective cost of solar energy (¢/kWh)		Levelized monthly cost of energy service			
			No credits	20% ITC	Projection 1 No credits	projection 2 No credits	Projection 2 20%ITC	Projection 3 20%ITC
Reference system								
Conv. Boiler and Utility Electricity (Municipal Utility Owner)	M504	0.0	NA/ NA	NA/ NA	2047.I NA	2799./ NA	2799./ NA	6127 / NA
Systems compared to reference system								
Solar Process Heat (180° F); 2-Cover Pond, Low-Temp. Storage, Oil Backup Boiler, and Utility Electricity (Municipal Utility Owner)	M505	168	8 89/ 1181	8.13/ 10.89	2621 I 2924	3246. / 3549	3167 /3454	5910I 6197
Solar Process Preheat (180" F max.); 2-Cover Pond, Low-Temp. Storage, 011 Backup Boiler, and Utility Electric~ty (Municipal Utility Owner)	M506	25.3	5.90/ 784	5.40/ 723	2445 I 2748.	3006./ 3309	2927 /3214	5375./ 5662
Solar Process Heat (180° F); 2-Cover Pond (Future Price), Low-Temp. Storage, 011 Backup Boiler, and Utility Electricity (Municipal Utility Owner)	M507	16.8	6.57/ 8.71	6.02/ 8.05	2381./ 2602.	3007/ 3228.	2950./3160.	5692/ 5903
Solar Process Preheat (180° F max.); 2-Cover Pond (Future Price), Low-Temp. Storage, 01 Backup Boiler, and Utility Electricity (Municipal Utility Owner)	M508	25.3	4.37/ 579	4 00/ 5.35	2205./ 2427.	2767I 2988	2710 /2920.	5157. / 5367
Solar Process Heat (180" F); Flat-Plates (1977 Prices), Low-Temp. Storage, 011 Backup Boiler, and Utility Electricity (Municipal Utility Owner)	M509	243	16 77/ 2393	14.86/ 21.63	4057. / 5130.	4626. / 5699.	4340 /5355	6822/ 7838
Solar Process Heat (180" F); Flat-Plates (Future Price), Low-Temp. Storage, Oil Backup Boiler, and Utility Electricity (Municipal Utility Owner)	M51O	24.3	10.70/ 1533	9 47/ 13.84	3148. / 3841.	3718. / 4410.	3533./4188.	6016 / 6671
Solar Process Heat (350° F); One-Axis Tracker (1977 Design), High-Temp. Storage, Oil Backup Boiler, and Utility Electricity (Municipal Utility Owner)	M511	245	21 70/ 29.94	19 50/ 27.29	4814. / 6056.	5382. / 6624	5050 /6225	7527/ 8702
Solar Process Heat (350° F); One-Axis Tracker (Future Design), High-Temp. Storage, 011 Backup Boiler, and Utility Electricity (Municipal Utility Owner)	M512	253	10.57/ 1449	9 52/ 1323	3172. / 3782.	3733/ 4344	3571 /4148	6019 / 6597
PV Cogeneration; Two-Axis Concentrators With GaAs Cells (Med. Price), Low-Temp. Storage, Oil Backup Boiler, and Utility Electric Backup (Municipal Utility Owner).	M513	493	7 75/ 1076	6.95/ 9.80	3463.1 4379.	3862. / 4778	3617./4484.	5374. / 6241.
PV Cogeneration; Two-Axis Concentrators With GaAs Cells (Low Price), Low-Temp. Storage, 011 Backup Boiler, and Utility Electric Backup (Municipal Utility Owner).	M514	51.9	5.06/ 6.96	4.55/ 6.35	2691 / 3298.	3075./ 3682.	2912./3487.	4613./ 5188.
Conventional oil systems								
Conv. Engine Cogeneration; Oil-Bur'ning Diesel Engine (Industrial Owner).	515	0.0	NA/ NA	NA/ NA	2072./ NA	2644. / NA	2644. / NA	5284. / NA

Conv Engine *Cogeneration; Otl-Burning Diesel Engine (Munlc!pal Utllity Owner).* . . .	M515	0 0	NA/	NA	NA/	NA/	1834./	NA	2406./	NA	2406./	NA	5046./	NA
Reference system														
Conv Engine Cogeneratlon; Oil-Burning Stlr-llng (Industrial Owner}, .	516	0 0	NA/	NA	NA/	NA	2017 /	NA	2566 /	NA	2566. /	NA	5100 /	NA
SYSWTemS compared to reference system														
Solar Engine Cogeneratlon. Two-Axis Dish, Stirling Engines, High and Low-Temp Storage. and *011 Backup (Industrial Owner).*	517	465	26331	1554	23 45/	1412	6821 /	4565	71 15, /	4859	6512 /	4562	7867 /	5917
Reference system														
Conv. Engine Cogeneratlon, 011-Burning Stlr-llng (Munlclpal Utlllty Owner).	M516	0 0	NA/	NA/	NA/	NA/	1898./	NA	2447./	NA	2447 /	NA	4980./	NA
Systems compared to reference system														
Solar Engine Cogeneratlon; Two-Axis Dish, Stlrl{ng Engines, High- *and Low-Temp. Storage, and 0il Backup (Municipal Utility Owner).*	M517	465		46.5	1.59/	16.11	).41/	14.69	3914/	4859	3667./	4562	5022 /	5917
Reference system														
Conv Gas Boiler and Utility Electricity (In-dustrlal Owner).	G504	00	NA/	NA	NA/	NA	1331 ./	NA	2210. /	NA	2210 /	NA	3864 /	NA
Systems compared to reference system														
Solar Process Heat (180° F); 2-Cover Pond, Low-Temp. Storage, Gas Backup Boiler, and Utllity Electrlclty (Industrial Owner)	G505	168	78.27/	1142	16.41/	050	3075./	2365	3794./'	3084.	3601 /	2989	5108. /	4496
Solar Process Preheat (180° F max.): 2-Cover Pond, Low-Temp. Storage, Gas Backup Boiler, and Utllity Electrlclty (Industrial Owner). ... , ... , ., ...	G506	253	12.13/	758	10 90/	696	2999./	2289.	3637. /	2927	344412832,		4877 /	4264
Solar *Process Heat (180° F); 2-Cover Pond (Future Price), Low-Temp. Storage, Gas Backup Boiler, and Util!ty Electricity (In-dustrlal Owner)* .	G507	168	13 36/	8.32	1 2.02/	766	2566. /	2044.	3285. /	2763.	3146./	2694.	4653 /	4201
Solar Process Preheat (180° F max.): 2-Cover Pond (Future Price), Low-Temp Storage, Gas Backup Boiler, and Utllity Electricity (Industnal Owner)	G508	253		25.3	3.87/	5.53	‘.98/	5.09	490./	1968.	128./	2606.	2989./	253;
Solar Process Heat (180 °F), Flat-Plates (1977 Prices). Low-Temp Storage, Gas Backup Boiler, and Utllity Electrlclty (Industrial Owner) ., ...	G509	243		24.3	0.56/	23.66	5.89/	21.36	191./	4659.	339./	5307.	7139./	496;
Solar Process t-teat (180° F); Flat-Plates (Future Price), Low-Temp. Storage, Gas Backup Boiler, and Utllity Electrlclty (In-dustrlal Owver)	G51O	243		24.3	3.08/	15.05	1.07/	13.57	)22./	3370.	370./	4018.	5219./	379(
Solar Process Heat (350° F); One-Axis Tracker (1977 Deslgn), High-Temp, Storage, Gas Backup Boiler, and Utllity Electricity (In-dustnal owner).	G511	245		24.5	9.11/	29.67	1.73/	27.02	518./	5586.	65./	6233.	8353./	583.

Summary description of system	Table number	Percent solar	Effective cost of solar energy (¢/kWh)		Levelized monthly cost of energy service			
			No credits	20% ITC	Projection 1 No credits	Project ion 2 No credits	Projection 2 20% ITC	Project ion 3 20 ITC
Systems compared to reference system—Con u e d								
Solar Process Heat (350° F); One-Axis Tracker (Future Design), High-Temp. Storage, Gas Backup Boiler, and Utllity Electricity (Indusrial Owner).	G512	25.3	23 63/ 1423	21 07/ 12.97	4788./ 3323	5427./ 3961.	5029./3766.	6461 / 5198.
PV Cogeneratlon; Two-Ax Is Concentrators With GaAs Cells (Med. Price), Low-Temp. Storage, Gas Backup Boiler, and Utility Electrtc Backup (Industrial Owner)	G513	49.3	17.79/ 1063	15.821 966	6176./ 3999	6639. / 4461	6040 /4167.	6957 I 5084.
PV Cogeneratlon; Tw o-Axis Concentrators With GaAs Cells (Low Price), Low-Temp. Storage, Gas Backup Boiler, and Utility Electric Backup (Industrial Owner)	G514	51.9	11 42/ 6.84	1o.18/ 623	4368 / 2901.	4818 / 3352	4421/3156	5245. / 3979
Reference system								
Conv. Gas Boiler and Utility Electricity (Municipal Utility Owner)	MG504	0.0	NA/ NA	NA/ NA	1291./ NA	2169./ NA	2169. / NA	3824. / NA
Systems compared to reference system								
Solar Process Heat (180° F); 2-Cover Pond, Low-Temp. Storage, Gas Backup Boiler, and Utility Electricity (Municipal Utility Owner).	MG505	16.8	8.89/11.81	8.13/ 10.89	2062./ 2365.	2781./ 3084.	2702./2989.	4209./ 4496.
Solar Process Preheat (180° F max.); 2-Cover Pond, Low-Temp. Storage, Gas Backup Boiler, and Utility Electricity (Municipal Utility Owner)	MG506	5.3	5.90/ 7.84	5.40/ 7.23	1986. / 2289.	2624./ 2927.	2545./2832.	3977. / 4264.
Solar Process Heat (180° F); 2-Cover Pond (Future Price), Low-Temp. Storage, Gas Backup Boiler, and Utility Electricity (Municipal Utility Owner)	MG507	6.8	6.57/ 8.71	6.02/ 8.05	1822./2044.	2541./ 2763.	2484./2694.	3991./ 4201.
Solar Process Preheat (180° F max.); 2-Cover Pond (Future Price), Low-Temp. Storage, Gas Backup Boiler, and Utility Electricity (Municipal Utility Owner)	MG508	25.3	4.37/ 5.79	4.00/ 5.35	1746. / 1968.	2384.1 2606.	2327./2537.	3760./ 3970.
Solar Process Heat (180° F); Fiat-Plates (1977 Prices), Low-Temp. Storage, Gas Backup Boiler, and Utility Electricity (Municipal Utility Owner)	MG509	24.3	16.77/ 23.93	14.86/ 21.63	3586./ 4659.	4234./ 5307.	3947./4962.	5389./ 6404.
Solar Process Heat (180° F); Flat-Plates (Future Price), Low-Temp. Storage, Gas Backup Boiler, and Utility Electricity (Municipal Utility Owner)	MG51O	24.3	10.70/ 15.33	9.47/ 13.84	2677./ 3370.	3325,/ 4018.	3141./3796.	4582./ 5237.
Solar **Process Heat (350° F); One-Axis Tracker (1977 Design), High-Temp. Storage, Gas Backup Boiler, and Utility Electricity (Municipal Utility** Owner)	MG511	24.5	21.70/ 29.94	19.50/ 27.29	4345./ 5586.	4991. / 6233.	4659./5834.	6099./ 7274.

Solar Process Heat (350° F); One-Axis Tracker (Future Design), High-Temp. Storage, Gas Backup Boiler, and Utility Electricity (Municipal Utility Owner)	*MG512*	*25.3*	10.57/ 14.49	*9.52/ 13.23*	*2712 / 3323.*	*3351 ./ 3961*	3188./3766.	4620 / 5198
PV Cogeneration; Two-Axis Concentrators With GaAs Cells (Med. Price), Low-Temp. Storage, Gas Backup Boiler, and Utility Electric Backup (Municipal Utility Owner)	*MG513*	*493*	7.75/ 10.76	*6.95/ 980*	*3083 / 3999.*	3545. / 4461.	3300 /4167.	4217 / 5084.
PV Cogeneration; Two-Axis Concentrators With GaAs Cells (Low Price), Low-Temp. Storage, Gas Backup Boiler, and Utility Electric Backup (Municipal Utility Owner)	*MG514*	*51.9*	*5.06/ 6.96*	*4.55/ 6.35*	*2294. / 2901.*	2744./ 3352.	2581 ./31 56.	3404. / 3979
Conventional gas systems								
Conv. Engine Cogeneration; Gas-Burning Diesel (Industrial Owner)	*G515*	**0.0**	*NA I*	*NA*	NA/ NA	1180. / NA	1 901. / *NA*	1901 ./ NA 2568. / NA
Conv. Engine Cogeneration; Gas-Burning Diesel (Municipal Utility Owner)	*MG515*	*0.0*	*NA/*	*NA*	*NA/ NA*	942. / NA	1663. / *NA*	1663. / NA 2330. / NA
Reference system								
Conv. Engine Cogeneration; Gas-Burning Stirling (Industrial Owner)	*G516*	**0.0**	NA/	*NA*	*NAI NA*	*1161. / NA*	1853. / NA	1853. / NA 2492. / *NA*
Systems **compared to reference system**								
Solar Engine Cogeneration; Two-Axis Dish, Stirling Engines, High- and Low-Temp. Storage, and Gas Backup (Industrial Owner)	*G517*	*46.5*	*26.33/ 15,54*	*23.45/ 14.12*	*6363./ 4107.*	6733.1 4477.	6131 ./4181	6473. / 4523.
Reference system								
Conv. Heat Engine Cogeneration; Gas- Burning *Stirling (Municipal* **Utility Owner)**	**MG516**	**0.0**	NA/ NA	NA/ NA	1 0 4 1 . / N A	1734. / NA	1734. / NA	2373. / NA
Systems compared to reference system								
Solar Engine Cogeneration; Two-Axis Dish, Stirling Engines, High- and Low-Temp. Storage, and Gas Backup (Municipal Owner)	**MG517**	46.5	11 59/ 1611	10.41 / 14.69	3162. / 4107.	3532./ 4477.	*3285./4181.*	*3628.1 4523*

CATALOG OF ENERGY SYSTEMS

Footnotes for catalog tables

a 1 Bbl. crude Oil is equivalent to 4.83 mmBtu after 17% loss due to refining, transportation, etc. Combined electrical generation, transmission, and distribution efficiency is 29 percent.

b The energy Cost escalation **assumptions are described** in detail in chapter II, **volume II. In all cases, 5.5 percent inflation is assumed.**

C The other costs assume that the energy equipment is owned by the building owners (see page 97). The equipment in the conventional communities is also owned by the owners of each of the buildings, while in the other communities, it is owned by a municipal utility. In all cases, the parenthesized costs assume ownership **by an** investor-owned utility using normalized accounting.

d "1985 Startup" is the same as "1976 Startup" except that fuel costs have escalated for 9 years. For ease of comparison with "1976 Startup, " 5.5 percent infiation between 1976 and 1985 has been removed.

e These levelized prices are computed from the price paid for energy in the reference nonsolar system.

Table IV-1 .-Albuquerque: Conventional System–Single Family House Using Gas Heat, Hot Water, and Central Electric A/C (SF-1)

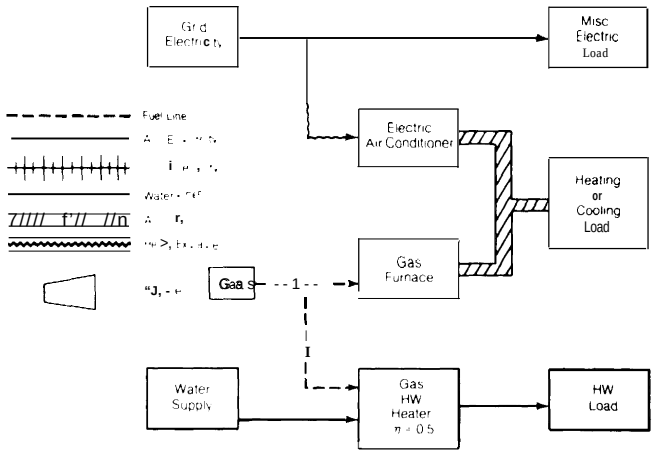

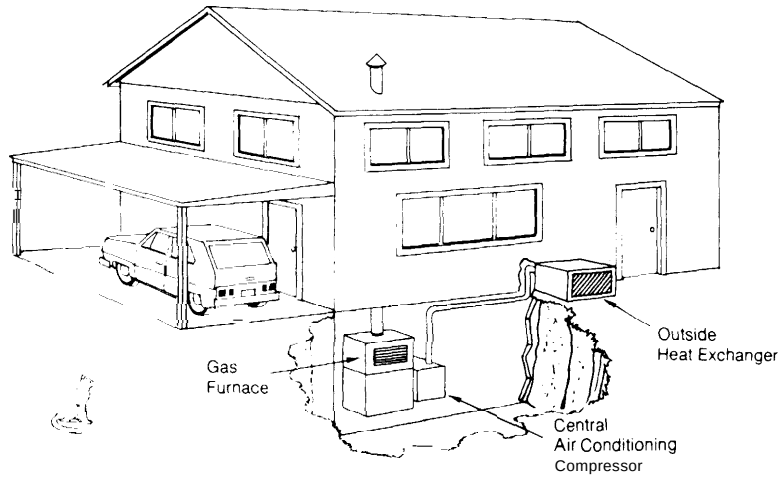

A. ITEMIZED COST OF COMPONENTS

Component	Size	Unit cost	First cost (incl. O&P)	Annual O&M	Life (yrs)
1. Gasfurnace	45MBtuh	15 $/M Btuh	$675	0	15
2. Ductwork	—	—	425	0	30
3. Central electric o/c	1.85 tons	430 $/ton	796	$30	10
4. Gas water heater	40 gal	225 ea.	225	0	15
TOTAL			$2,121	$30	

B. LEVELIZED MONTHLY COSTS PER UNIT TO CONSUMER (Dollars)[b,c]

(Conventional reference system is SF-1)

	Escalation of conventional energy costs					
	Constant real energy prices		Energy price escalation I		Energy price escalation II	
1. 1976 Startup						
Total with no incentives	116.	(128.)	153.	(165.)	226.	(238.)
Total with 20% IT	116.	(128.)	153.	[165.)	226.	(238.)
Total with full incentives	116.	(128.)	153.	(165.)	226.	[238.)
2. 1985 Startup[d]						
(capital related Costs)	29.	[41.)	29.	(41.)	29.	(41.)
(operation maintenance costs)	4.	[4.)	4.	(4.)	4.	(4.)
(fuel bill)	36.	(36.)	73.	(73.)	108.	(108.)
(electric bill)	48.	(48.)	67.	(67.)	146.	(146.)
Total with no incentives	116.	(128.)	173.	(185.)	287.	(299.)
Total with 20% ITC	116.	(128.)	173.	(185.)	287.	(299.)
Total with full incentives	116.	(128.)	173.	(185.)	287.	[299.)

C. EFFECTIVE COST OF ENERGY TO CONSUMER

(Conventional reference system is SF-1)

Levelized cost of solar energy or 'conservation' energy[c]	Type of incentives given					
	No incentives		20% ITC		Full incentives	
$/MMBtu primary fad.	N/A	(N/A)	N/A	(N/A)	N/A	(N/A)
¢/kWh electricity	N/A	(N/A)	N/A	(N/A)	N/A	(N/A)

Levelized price paid for conventional energy[b,e]	Escalation of conventional energy cosh		
	Constant real energy prices	Energy price ecobtion I	Energy price escalation II
$/MMBtu primary	3.37	4.86	7.80
¢/kWh electricity	3.97	5.73	9.18

ANNUAL ENERGY FLOWS (Conventional reference system is SF-1)

	Energy consumed by ref. system	Backup consumed w/ solar/conservation	Energy saved (% of total)
Net Electricity (bought-sold) (MWh/unit)	11.3	11.3	0.
Fuel consumed onsite (MMBtu/unit)	164.	164.	0.
Total energy requirement (bbl crude equiv.)[a]	62.	62.	0.
Electricity sold to grid annually (MWh, entire building)			0.
Annual peak electricity demand (kW, entire building)			5.2

Table IV-2.—Albuquerque: Conventional System- Single Family House Using Improved Gas Heat, Hot Water, and Central Electric A/C

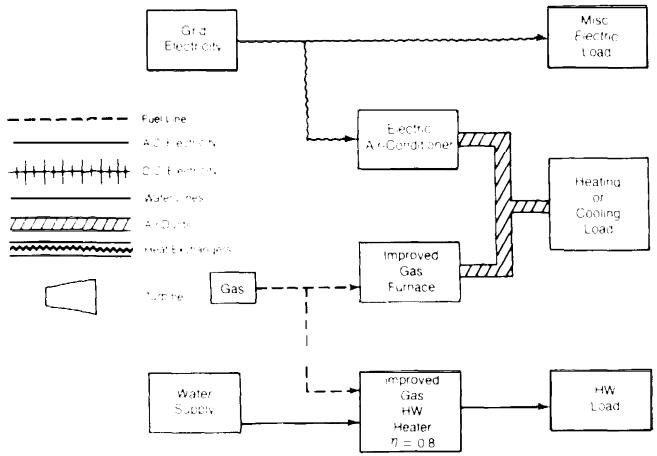

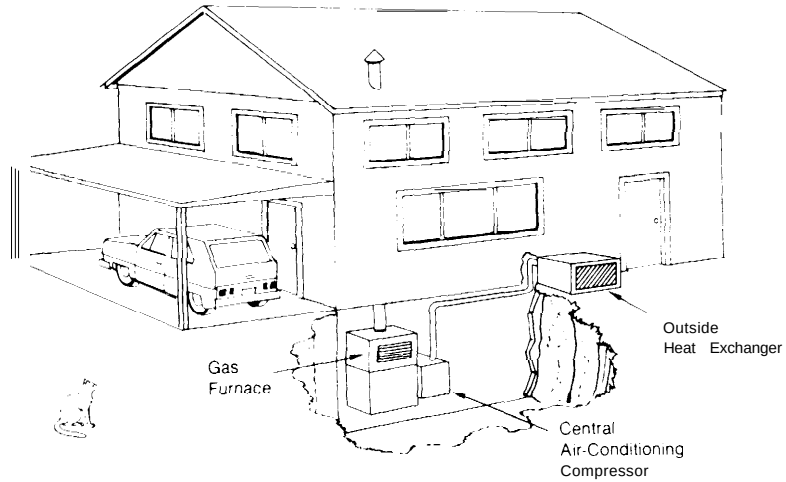

A. ITEMIZED COST OF COMPONENTS

Component	Size	Unit cost	First cost (incl. O&P)	Annual O&M	Life (yrs)
1. Gas furnace	45M Btuh	17 $/M Btuh	$765	0	15
2. Ductwork	—	—	425	0	30
3. Central electric a/c	1.85 tons	430 $/ton	796	$30	20
4. Gas water heater	40 gal	$275 ea.	275	0	15
TOTAL			$2,261	$30	

B. LEVELIZED MONTHLY COSTS PER UNIT TO CONSUMER (Dollars)[b,c]

(Conventional reference system is SF-1)

	Escalation of conventional energy costs: constant real energy prices	Energy price escalation I	Energy price escalation II
1. 1976 Startup			
a. Costs using solar (conservation) system:			
Total with no incentives	111. (123.)	143. (155.)	210. [223.)
Total with 20% IT	111. (123.)	142. (155.)	210. (223.]
Total with full incentives	110. (122.)	142. (154.)	210. [222.)
b. Costs using conventional reference system	117.	154.	226.
2. 1985 Startup[d]			
a. Costs using solar (conservation) system:			
(capital related costs)	31. (43.)	31. (43.)	31. (43.)
(operation & maintenance costs)	4. (4.)	4. (4.)	4. (4.)
(fuel bill)	28. (28.)	58. (58.)	85. (85.)
(electric bill)	48. (48.)	67. [67.)	146. (146.)
Total with no incentives	111. (123.)	160. (172.)	266. (278.)
Total with 20% IT	111. (123.)	160. (172.)	266. (278.)
Total with full incentives	110. (122.)	159. (171.)	265. (277.)
b. Costs using conventional reference system	117.	174.	287.

C. EFFECTIVE COST OF ENERGY TO CONSUMER

(Conventional reference system is SF-I)

Levelized cost of solar energy or 'conservation' energy	Type of incentives given: No incentives	20% ITC	Full incentives
$/MMBtu primary fuel	.61 (4.84)	.53 (4.77)	43 (4.56)
¢/kWh electricity	.71 (5.70)	.62 (5.62)	.51 (5.36)

Levelized price paid for conventional energy[b,e]	Escalation of conventional energy costs: Constant real energy prices	Energy price escalation I	Energy price escalation II
$/MMBtu primary fuel	3.37	4.86	780
¢/kWh electricity	3.97	5.73	9.28

ANNUAL ENERGY FLOWS

(Conventional reference system is SF-1)

	Energy consumed by ref. system	Backup consumed w/ solar/conservation	Energy saved (% of total)
Net Electricity (bought-sold) (MWh/unit)	11.3	11.3	0.
Fuel consumed onsite (MMBtu/unit)	164.	129.	21.4
Total energy requirement (bbl crude equiv.)[a]	62	54.	11.9
Electricity sold to grid annually (MWh, entire building)			
Annual peak electricity demand (kW, entire building)			5°2

Table IV-3.—Albuquerque: Conventional System—Insulated Single Family House Using Gas Heat, Hot Water, and Central Electric A/C

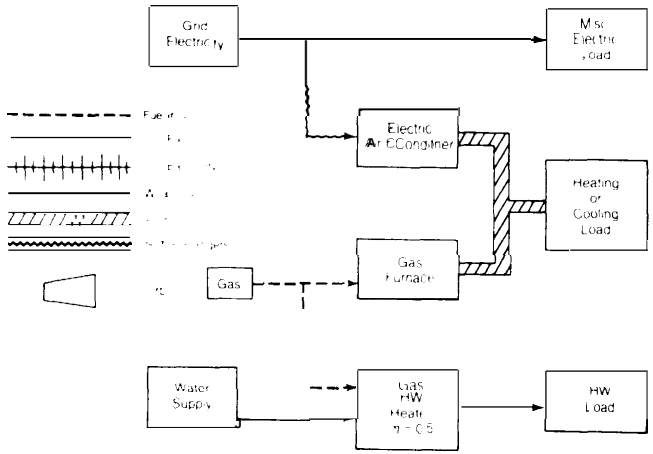

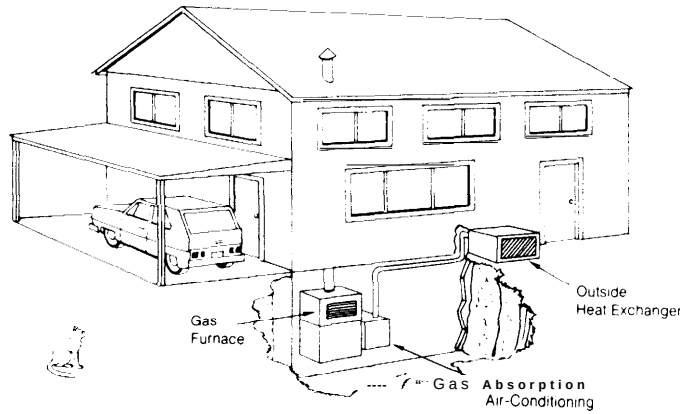

A. ITEMIZED COST OF COMPONENTS

Component	Size	Unit cost	First cost (incl. O&P)	Annual O&M	Life (yrs)
1. Gas furnace	31 M Btuh	15 $/M Btuh	$465	0	15
2. Ductwork	—	—	425	0	30
3. Central electric c/c	1.3 tons	430 $/ton	559	$30	10
4. Gas water heater	40 gal	225 ea.	225	0	15
5. Extra insulation, storm doors and windows	—	—	981	0	30
TOTAL			$2,655	$30	

B. LEVELIZED MONTHLY COSTS PER UNIT TO CONSUMER (Dollars)[b,c]

(Conventional reference system is SF-1)

	Escalation of conventional energy costs: Constant real energy prices		Energy price escalation I		Energy price escalation II	
1. 1976 Startup						
a. Costs using solar (conservation) system:						
Total with no incentives	106.	(119.)	136.	(149.)	201.	(214.)
Total with 20% ITC	105.	(119.)	135.	149.)	200.	(213.)
Total with full incentives	103.	(116.)	133.	146.)	198.	(211.)
b. Costs using conventional reference system	116.		153.		226.	
2. 1985 Startup[d]						
0. Costs using solar (conservation) system:						
(capital related costs)	30.	(43.)	30.	(43.)	30.	(43.)
(operation & maintenance costs)	4.	[4.)	4.	(4.)	4.	(4.)
(fuel bill)	26.	(26.)	54.	(54.)	80.	(so.)
(electric bill)	46.	[46.)	65.	[65.]	140.	(140.)
Total with no incentives	106.	(119.)	153.	166.)	254.	(267.)
Total with 20% ITC	105.	(119.)	152.	165.)	253.	(266.)
Total with full incentives	103.	(116.)	150.	162.)	251,	(264.)
b. Costs using conventional reference system	116.		173		287.	

C. EFFECTIVE COST OF ENERGY TO CONSUMER

(Conventional reference system is SF-1)

Levelized cost of solar energy or 'conservation' energy[c]	Type of incentives given: No incentives		20% ITC		Full incentives	
$/MMBtu primary fuel	.22	(3.38)	.01	(3.21)	-.45	[2.62)
¢/kWh electricity	.26	(3.98)	.02	(3.77)	-.54	(3.08)

Levelized price paid for conventional energy[b,e]	Escalation of conventional energy costs: Constant reel energy prices	Energy price escalation I	Energy price escalation II
$/MMBtu primary fill	3.37	4.86	7.80
t/k Wh electricity	3.97	5.73	918

ANNUAL ENERGY FLOWS (Conventional reference system is SF-1)

	Energy consumed by ref. system	Backup consumed w/ solar/conservation	Energy saved (% of total)
Net Electricity (bought-sold) (MWh/unit)	11.3	10.7	4.9
Fuel consumed onsite (MMBtu/unit)	164.	121.	26.4
Total energy requirement (bbl crude equiv.)[a]	62.	51.	16.8
Electricity sold to grid annually (MWh, entire building)			0.
Annual peak electricity demand (kW, entire building)			4.3

Table IV-4.—Albuquerque: Solar Hot Water System—Single Family House Using Flat-Plate Collectors (1977 Prices); Building Equipped With SF-1 Space-Conditioning

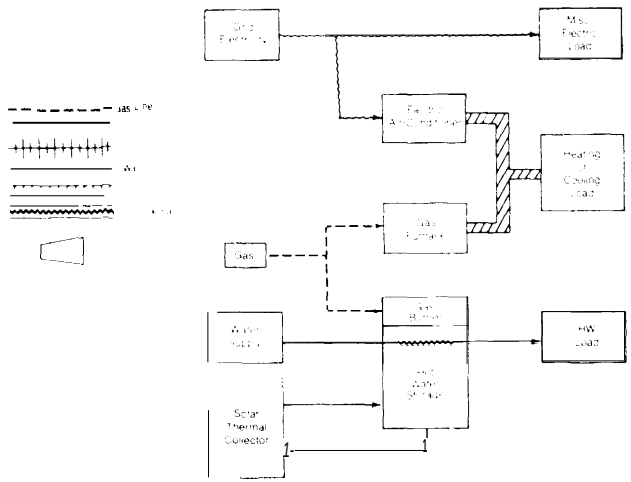

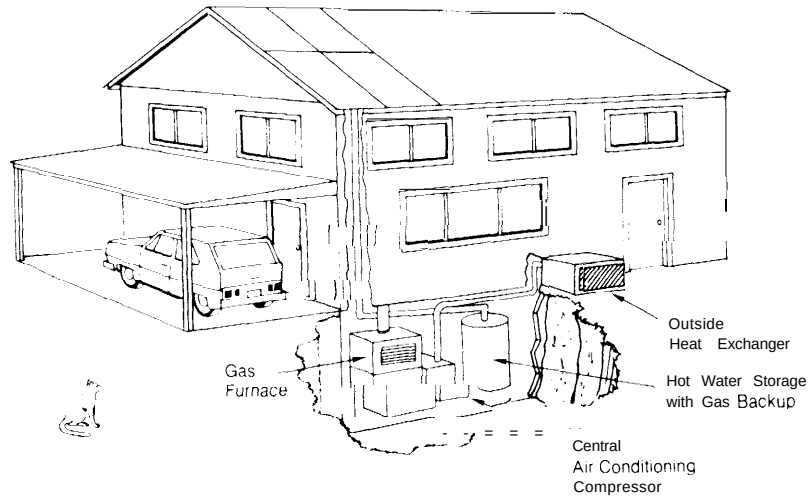

A. ITEMIZED COST OF COMPONENTS

Component	Size	Unit cost	First cost (incl. O&P)	Annual O&M	life (yrs)
1. Gas furnace	45M Btuh	15 $/M Btuh	$675	0	15
2. Ductwork	—	—	425	0	30
3 Central electric a/c	1.85 tons	430 $/ton	796	$30	10
4. Hot water storage with gas fired backup (including heat exchanger).	100 gal	$380	380	0	30
5. Pumps and control	—	$250	250	0	10
6 Insulated steel pipe	75 ft	$2.6/ft	195	0	30
7 Flat plate solar collectors	10 m²	143 $/m'	'71 5	0	30
——Collector cost @ 95 $/m²			"715	o	15
——Installation @ 16 $/m²					
——Transportation @ $ 3/ins					
——Overhead and profit= 25%					
TOTAL			$4,151	S30	

•½ installed collector cost assumed replaced in 15 yrs., with total replacement in 30 yrs.

ANNUAL ENERGY FLOWS

(Conventional reference system is SF-1)

	Energy consumed by ref. system	Backup consumed w/ solar/conservation	Energy saved (% of total)
Net Electricity (bought-sold) (MWh/unit)	11.3	11.3	0.
Fuel consumed onsite (MMBtu/unit)	164.	117.	28.7
Total energy requirement (bbl crude equiv.)[a]	62.	52.	15.9
Electricity sold to grid annually (MWh, entire building)			o.
Annual peak electricity demand (kW, entire building)			5.2

8. LEVELIZED MONTHLY COSTS PER UNIT TO CONSUMER (Dollars)[bc]

(conventional reference system is SF-1)

	Escalation of conventional energy costs: Constant real energy prices	Energy price escalation I	Energy price escalation II
1. 1976 Startup			
a. Costs using solar (conservation) system:			
Total with no incentives	127. 148.)	157. (178.)	224. (244.)
Total with 20% IT	124. 146.)	154. [176.)	220. (242.)
Total with full incentives	120. 136.)	150. [166.)	216. (232.)
b. Costs using conventional reference system	117.	1s4.	226.
2. 1985 Startup[d]			
0. Costs using solar (conservation) system:			
(capital related costs)	50. (71.)	50. (71.)	50. (71.)
[operation & maintenance costs)	4. (4.)	4. (4.)	4. (4.)
(fuel bill)	25. (25.)	52. (52.)	77. (77.)
[electric bill)	48. (48.)	67. (67.)	146. (146.)
Total with no incentives	127. 148.)	174. [195.)	277. (298.)
Total with 20% IT	124. 146.)	170. (192.)	274. (295.)
Total with full incentive	120. 136.)	166. (182.)	270. (286.)
b. Costs using conventional reference system	1 ?7	174.	287.

C. EFFECTIVE COST OF ENERGY TO CONSUMER

(Conventional reference system is SF-1)

Levelized cost of solar energy or 'conservation' energy[c]	Type of incentives given: No incentives	20% ITC	Full incentives
$/MMBtu primary fuel	5.33 (10.64)	4.50 (9.94)	3.41 (7.58)
¢/kWh electricity	6.27 (12.53)	5.30 [1 1.69)	4.01 [8.92)

Levelized price paid for conventional energy[b e]	Escalation of conventional energy costs: Constant real energy prices	Energy price escalation I	Energy price escalation II
$/MMBtu primary fuel	337	4.86	7.80
g/kWh electricity	397	573	9.18

Table IV-5.—Albuquerque: Solar Hot Water System—Single Family House Using Flat-Plate Collectors (Possible Future Price); Building Equipped With SF-1 Space. Conditioning

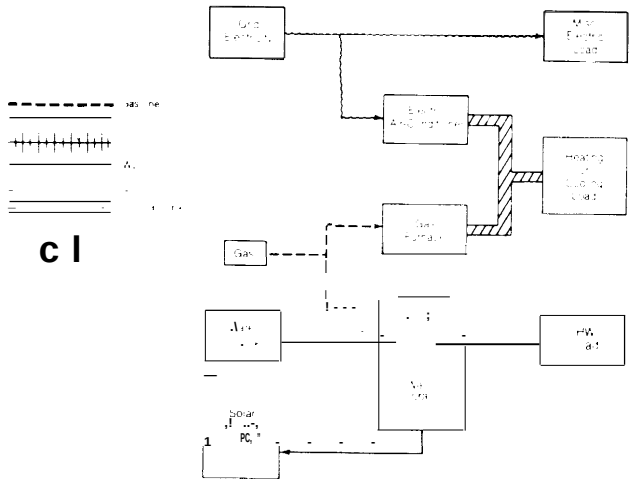

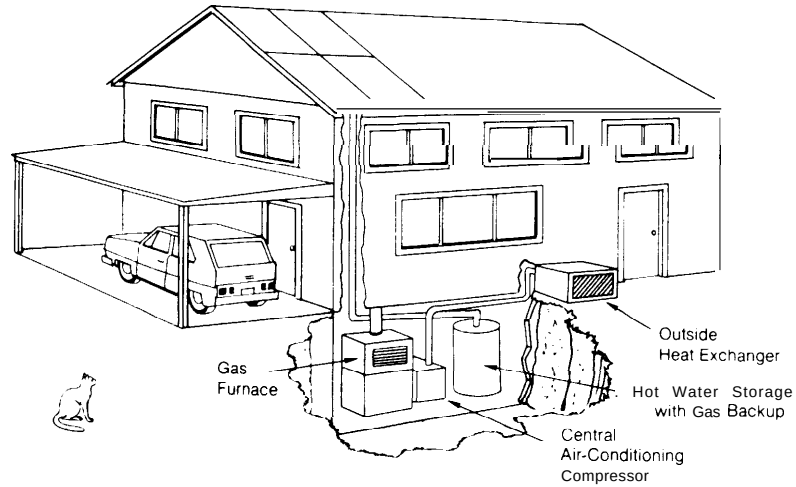

A. ITEMIZED COST OF COMPONENTS

Component	Size	Unit cost	First cost (incl. O&P)	Annual O&M	Life (yrs)
1. Gas furnace	45 MBtuh	15 $/M Btuh	$675	0	15
2. Ductwork	—	—	425	0	30
3. Central electric a/c	1.85 tons	430 $/ton	796	$30	10
4. Hot water storage with gas fired backup (including heat exchanger).	100 gal	$380	380	0	30
5. Pumps and control.	–	$250	250	0	10
6. Insulated steel pipe	75 ft	$2.6/ft	195	0	30
7. Flat plate solar collectors	10 m²	86 $/m²	*430	0	15
—Collector cost @ 50 $/m²			'430	o	30
——installation @ 16 $/m²					
——Transportation @ $ 3/m²					
——Overhead and profit= 25%					
TOTAL			$3,581	$30	

*½ installed collector cost assumed replaced in 15 yrs., with total replacement in 30 yrs.

ANNUAL ENERGY FLOWS

(Conventional reference system is SF-1)

	Energy consumed by ref. system	Backup consumed w/ solar/conservation	Energy saved (% of total)
Net Electricity (bought-sold) (MWh/unit)	11.3	11.3	0.
Fuel consumed onsite (MMBtu/unit)	164.	117.	28.7
Total energy requirement (bbl crude equiv.)[a]	62.	52.	15.9
Electricity sold to grid annually (MWh, entire building)			0.
Annual peek electricity demand (kW, entire building)			5.2

B. LEVELIZED MONTHLY COSTS PER UNIT TO CONSUMER (Dollars)[b,c]

(Conventional reference system is SF-1)

	Escalation of conventional energy costs: Constant real energy prices		Energy price escalation I		Energy price escalation II	
1. 1976 Startup						
a. Costs using solar (conservation) system:						
Total with no incentives	122.	(140.)	151.	(170.)	218.	(236.)
Total with 20% ITC	119.	(138.)	149.	[168.)	215.	(234.)
Total with full incentives	116.	(131.]	146.	[161.)	212.	(227.]
b. Costs using conventional reference system	117.		134.		226.	
2. 1985 Startup[d]						
cc. Costs using solar (conservation) system						
(capitol related costs)	44.	(62.)	44.	(62.)	44.	[62.)
(operation & maintenance costs)	4.	(4.)	4.	[4.)	4.	(4.)
(fuel bill)	25.	(25.)	52.	(52.)	77.	(77.)
(electric bill)	48.	(48.)	67.	(67.)	146.	[146.)
Total with no incentives	122.	(140.)	168.	(186.)	271.	(289.)
Total with 20% ITC	119.	(138.)	165.	(184.)	269.	(287.)
Total with full incentives	116.	(131.)	162.	(177.]	266.	[281.)
b. Costs using conventional reference system	117.		174.		287.	

C. EFFECTIVE COST OF ENERGY TO CONSUMER

(Conventional reference system is SF-1)

Levelized cost of solar energy or 'conservation' energy[c]	Type of incentives given: No incentives		20% ITC		Full incentives	
$/MMBtu primary fad	3.83	(8.46)	3.23	(7.95)	2.45	(6.25)
¢/kWh electricity	4.51	(9.95)	3.80	(9.35)	2.88	(7.36)

Levelized price paid for conventional energy[b,e]	Escalation of conventional energy costs: Constant real energy prices	Energy price escalation I	Energy price escalation II
$/MMBtu primary fowl	3.37	4.86	7.80
¢/kWh electricity	3.97	5.73	9.18

Table IV-6.—Albuquerque: Solar Hot Water and Heating System—Single Family House Using Flat-Plate Collectors (1977 Prices), Low. Temperature Thermal Storage; Building Equipped With SF-1 Space. Conditioning

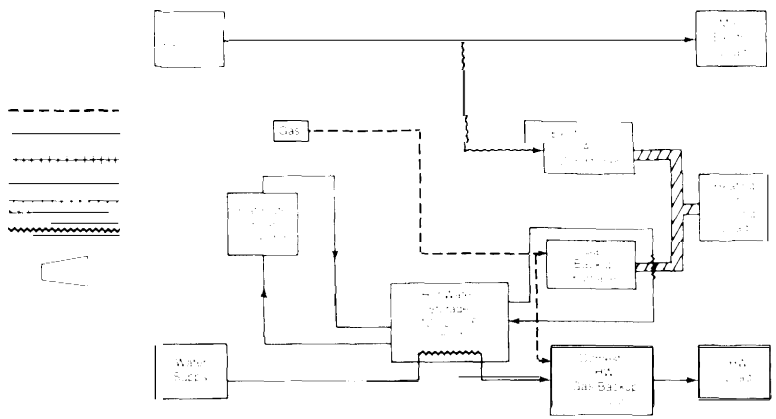

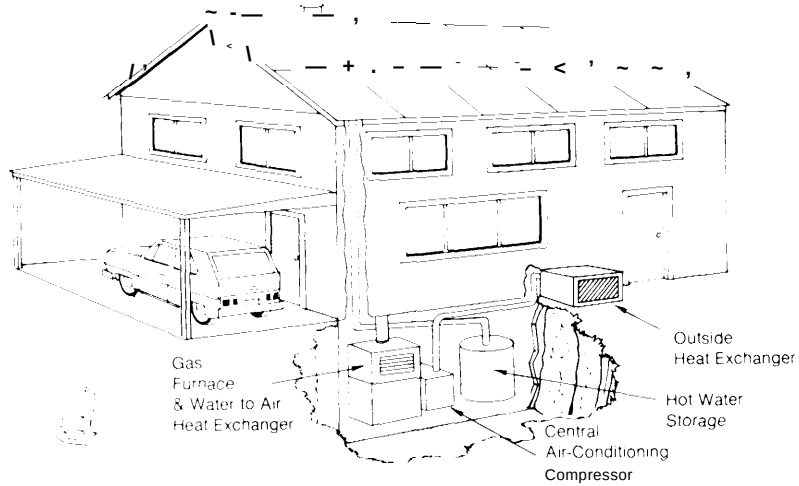

A. ITEMIZED COST OF COMPONENTS

Component	Size	Unit cost	First cost (incl. O&P)	Annual O & M	Life (yrs)
1. Gas furnace	45M Btuh	15 $/M Btuh	$675	0	15
2. Central electric O/c	1.85 tons	430 $/ton	796	$30	10
3. Ductwork	—	—	425	0	30
4 Collectors and associated costs	45 m^2	143 $/m^2$	● 3,218	o	15
——Collectors @ 95 $/m²			● 3.218	o	30
——installation @ 16 $/m'					
——Transportation @ 3 $/m'					
——25 % overhead and profit					
5 ¾" insulated steel pipe	125 ft	$4.1	513	0	30
6. Storage (without plumbing)	200 kWh	$2.05/kWh	410	0	30
7 Pump, controls, and heat exchanger	—	S650	650	0	10
TOTAL			$9,905	$30	

•½ installed collector cost assumed replaced in 15 yrs., with total replacement in 30 yrs

ANNUAL ENERGY FLOWS

[Conventional reference systemis SF-1)

	Energy consumed by ref. system	Backup consumed w/ sOlOr/conservation	Energy saved (% of total)
Net Electricity (bought-sold) (MWh/unit)	11.3	11.3	-.1
Fuel consumed onsite (MMBtu/unit)	164.	42.	74.1
Total energy requirement (bbl crude equiv.)[a]	62.	36.	41,0
Electricity sold to grid annually (MWh, entire building)			•
Annual peak electricity demand (kW, entire building)			5°2

B. LEVELIZED MONTHLY COSTS PER UNIT TO CONSUMER (Dollars)[b,c]

(Conventional reference system is SF-1)

	Escalation of conventional energy costs		
	Constant real energy prices	Energy price escalation I	Energy price escalation II
1. 1976 Startup			
a. Costs using solar (conservation) system:			
Total with no incentives	173. (222.)	192. (240.)	248. [297.)
Total with 20% IT	161. (211.)	179. (230.)	236. (286.)
Total with full incentives	144. (175.)	163. (194.)	219. (250.)
b. Costs using conventional reference system	117.	154.	226.
2. 1985 Startup[d]			
o. Costs using solar (conservation) system:			
(capital related costs)	112. (160.)	112, [160.)	112. (160.)
(operation & maintenance costs)	4. (4.)	4. [4.]	4. (4.)
[fuel bill)	9. (9.)	19. (19.)	28. (28.)
(electric bill)	48. [48.)	67. (67.)	146. (146.)
Total with no incentive!	173. [222.)	202. (251.)	290. (338.)
Total with 20% ITC	161. (211.)	190. [240.)	277 (328.)
Total with full incentives	144. [175.)	173, [204.)	261 (292.)
b. Costs using conventional reference system	117.	174.	287

C. EFFECTIVE COST OF ENERGY TO CONSUMER

[Conventional reference systemis SF-1)

Levelized cost of solar energy or 'conservation' energy"	Type of incentives given		
	No incentive	20% ITC	Full Incentives
$/MMBtu primary fuel	8.15 (12.93)	6.92 [11.B8)	5.30 (8.37)
¢/kWh electricity	9.60 (15.22)	8.14 (13 98)	623 (9 85)

Levelized price paid for conventional energy[b,e]	Escalation of conventional ● nergy costs		
	Constant real energy prices	Energy price escalation I	Energy price escalation II
$/MMBtu primary fuel,	337	4.86	780
~/k Wh electricity	397	573	918

Table IV-7.—Albuquerque: Solar Hot Water and Heating System—Single Family House Using Flat-Plate Collectors (Possible Future Price), Low-Temperature Thermal Storage; Building Equipped With SF-1 Space-Conditioning

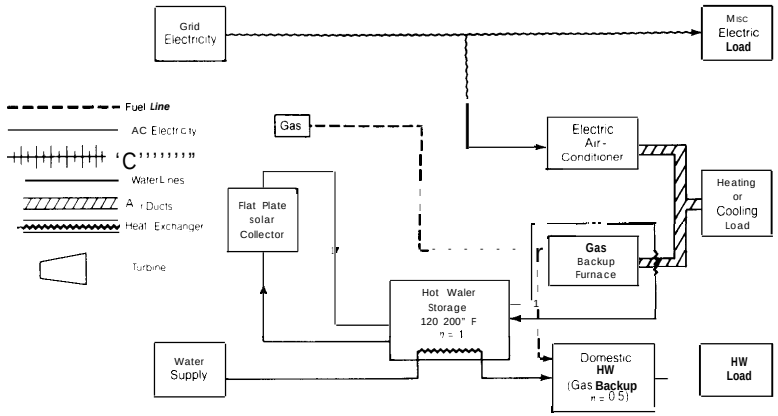

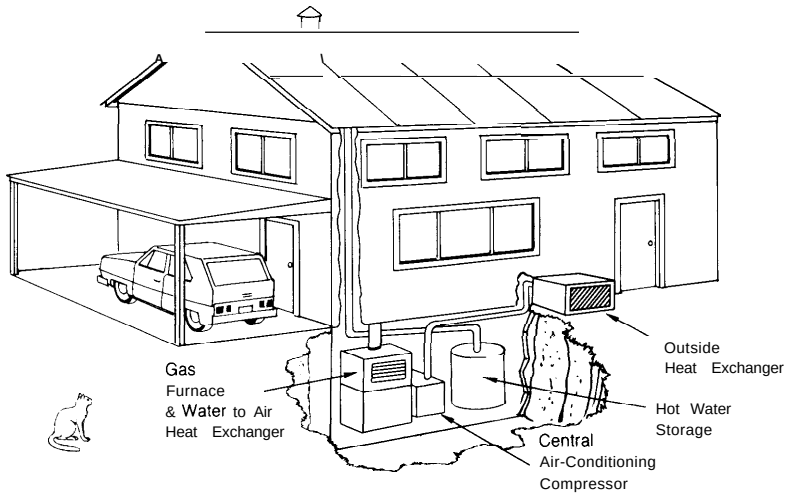

A. ITEMIZED COST OF COMPONENTS

Component	Size	Unit cost	First cost (incl. O & P)	Annual O & M	Life (yrs)
1. Gas furnace	45M Btuh	15 $/M Btuh	$675	0	15
2. Control electric a/c	1.85 tons	430 $/ton	796	$30	10
3. Ductwork	—	—	425	0	30
4. Collectors and associated costs	45 m²	86 $/m'	● 1,935	0	15
—Collectors @ 50 $/m*			● 1,935	o	30
—Installation @ 16 $/m'					
—Transportation @ 3 $/m²					
—-25% overhead and profit					
5. %" insulated steel pipe	125 ft	$4.1	513	0	30
6. Storage (without plumbing)	200 kWh	$2.05/kWh	410	0	30
7. Pump, controls, and heat exchanger	—	$650	500	0	10
TOTAL...			$7,189	$30	

•?4 installed collector cost assumed replaced in 15 yrs., with total replacement in 30 yrs.

ANNUAL ENERGY FLOWS

(Conventional reference system is SF-1)

	Energy consumed by ref. system	Backup consumed w/ solar/conservation	Energy saved (% of total)
Net Electricity (bought-sold) (MWh/unit)	11.3	11.3	-.1
Fuel consumed onsite (MMBtu/unit)	164.	42.	74.1
Total energy requirement (bbl crude equiv.)[a]	62.	36.	41.0
Electricity sold to grid annually (MWh, entire building)			0.
Annual peak electricity demand (kW, entire building)			5.2

B. LEVELIZED MONTHLY COSTS PER UNIT TO CONSUMER (Dollars)[b,c]

(Conventional reference system is SF-1)

	Escalation of conventional energy costs: Constant real energy prices	Energy price escalation I	Energy price escalation II
1. 1976 Startup			
o. Casts using solar (conservation) system:			
Total with no incentives	144. (179.)	163. (198.)	219. (254.)
Total with 20% IT	136. (172.)	154. (191.)	211. (247.)
Total with full incentives	125. (149.)	14. (168.)	200. (224.)
b. Costs using conventional reference system	117.	154.	226.
2. 1985 Startup[d]			
a. Costs using solar (conservation) system:			
(capital related costs)	82. (118.)	82. [118.)	82. (118.)
[operation & maintenance costs)	4. (4.)	4. (4.)	4. (4.)
(fuel bill)	9. (9.)	19. (19.)	28. [28.)
(electric bill)	48. (48.)	67. (67.)	146. (146.)
Total with no incentives	144. (179.)	173. (208.)	261. (296.)
Total with 20% IT...	136. (172.)	165. (201.)	252. (289.)
Total with full incentives	125. (149.)	154. (178.)	242. [266.)
b. Costs using conventional reference system	117.	174.	287.

C. EFFECTIVE COST OF ENERGY TO CONSUMER

(Conventional reference system is SF-1)

Levelized cost of solar energy or 'conservation' energy[c]	Type of incentives given: No incentives	20% ITC	Full incentives
$/MMBtu primary fuel	5.27 [8.76)	4.47 (8.07)	3.41 (5.79)
¢/kWh electricity	6.20 (10.30)	5.26 (9.50)	4.01 (6.81)

Levelized price paid for conventional energy[b,e]	Escalation of conventional energy costs: Constant real energy prices	Energy price escalation I	Energy price escalation II
$/MMBtu primary rid...	3.37	4.86	7.80
¢/kWh electricity	3.97	5 7 3	9.18

Table IV-8.—Albuquerque: Conventional System—Single Family House Using Oil Heating and Central Electric A/C (SF-5)

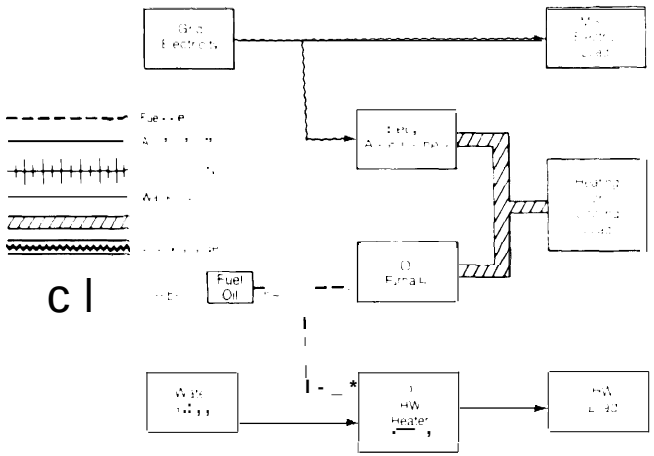

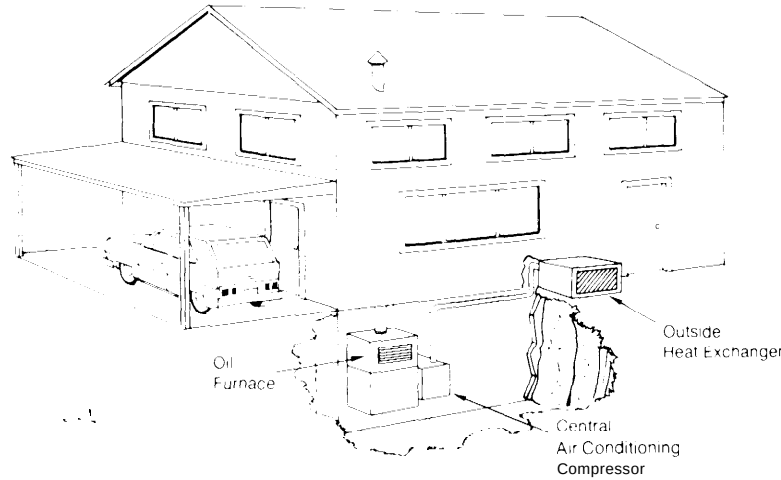

A. ITEMIZED COST OF COMPONENTS

Component	Size	Unit cost	First cost (incl. O&P)	Annual O&M	Life (yrs)
1. Oil furnac e..	45 M Btuh	23 $/M Btuh	$1,030	$30	15
2. Ductwork	—	—	425	0	30
3. Central electric o/c	1.85 tons	430 $/ton	796	30	10
4. Gas hot water heater	40 gal	225 ea.	225	0	15
TOTAL			$2,476	$60	

B. LEVELIZED MONTHLY COSTS PER UNIT TO CONSUMER (Dollars)[b,c]

[Conventional reference system is SF-5)

	Escalation of conventional energy costs					
	Constant real energy prices		Energy price escalation I		Energy price escalation II	
1. 1976 Startup						
Total with no incentives	179.	(193.)	212.	(226.)	358.	(372.)
Total with 20% IT	179.	[193.)	212.	[226.)	358.	(372.)
Total with full incentives	179.	(193.)	212.	[226.)	358.	(372.)
2. 1985 Startup[d]						
(capitol related costs)	33.	[47.)	33.	(47.)	33.	(47.)
(operation & maintenance costs)	9.	(9.)	9.	(9.)	9.	[9.)
(fuel bill)	88.	[88.)	120.	(120.)	268.	(268.]
(electric bill)	49.	(49.)	68.	(68.)	14s.	[148.)
Total with no incentives	179.	(193.)	230.	[244.)	4s8.	(472.)
Total with 20% IT	179.	(193.)	230.	(24.)	458.	[472.)
Total with full incentives	179.	(193.)	230.	[244.)	458.	(472.)

C. EFFECTIVE COST OF ENERGY TO CONSUMER

(Conventional reference system is SF-5)

	Type of incentives given					
Levelized cost of solar energy or 'conservation' energy'	No incentives		20% ITC		Full incentives	
$/MMBtu primary fuel	N/A	(N/A)	N/A	[N/A)	N/A	[N/A)
¢/kWh electricity	N/A	[N/A)	N/A	(N/A)	N/A	(N/A)

	Escalation of conventional energy costs		
Levelized price paid for conventional energy[b,e]	Constant real energy prices	Energy price escalation I	Energy price escalation II
$/MMBtu primary fuel	482	5. w	1 1 15
¢/kWh electricity	5.67	7.05	13.12

ANNUAL ENERGY FLOWS (Conventional reference system is SF-51

	Energy consumed by ref. system	Backup co. sumed w/ dar/conservation	Energy saved (% of total)
Net Electricity (bought-sold) (MWh/unit)	11.5	11.5	0
Fuel consumed onsite (MMBtu/unit)	205.	205.	0.
Total energy requirement (bbl crude equiv.)[a]	71.	71.	0.
Electricity sold to grid annually (MWh, entire building)			o.
Annual peak electricity demand (kW, entire building)			5.2

Table IV-9.—Albuquerque: Conventional System–Single Family House Using Improved Oil Heating and Central Electric A/C (SF-5)

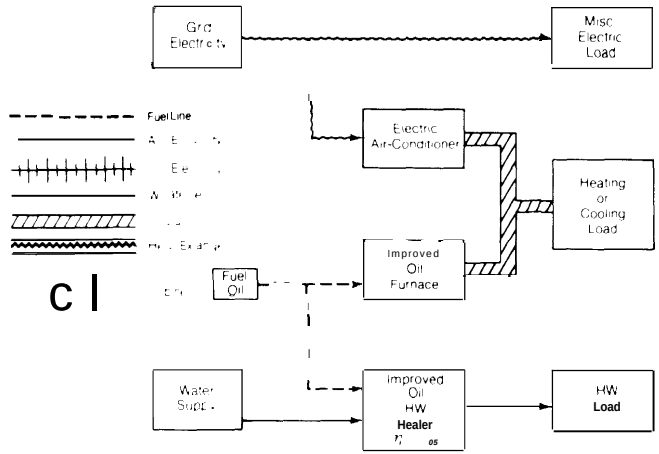

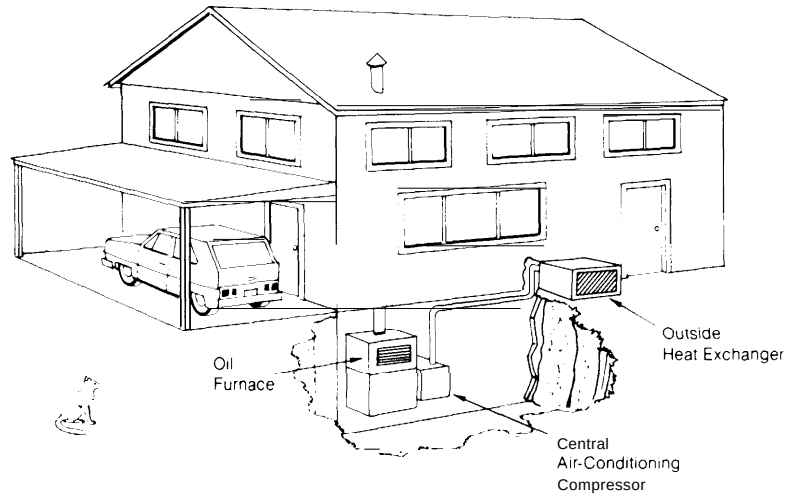

A. ITEMIZED COST OF COMPONENTS

Component	Size	Unit cost	First cost (incl. O&P)	Annual O & M	Life (yrs)
1. Oil furnace	45 M Btuh	25 $/M Btuh	$1,120	$30	15
2. Ductwork	—	—	425	0	30
3. Central electric a/c	1.85 tons	430 $/ton	796	30	10
4. Gas water heater	40 gal	$275 ea.	275	0	15
TOTAL			$2,616	$60	

B. LEVELIZED MONTHLY COSTS PER UNIT TO CONSUMER (Dollars)[b,c]

(Conventional reference system is SF-5)

	Escalation of conventional energy costs		
	Constant real energy prices	Energy price escalation I	Energy price escalation II
1. 1976 Startup			
0. Costs using solar (conservation) system:			
Total with no incentives	163. (178.)	192. (207.)	320. (334.)
Total with 20% ITC	163. (177.)	192. (206.)	319. (334.)
Total with full incentives	163. (177.)	192. [206.}	319. (333.)
b. Costs using conventional reference system	179.	212.	358.
2. 1985 Startup[d]			
a. Costs using solar (conservation) system:			
(capital related casts	35. [50.)	35. [50.)	35. (50.)
(operation & maintenance costs)	9. [9.)	9. (9.)	9. (9.)
(fuel bill)	69. (69.)	94. (94.)	211. [21 1.)
(electric bill)	50. (50.]	70. (70.)	152. (152.)
Total with no incentives	163. (178.)	208. (223.)	407. (421.)
Total with 20% ITC	163. (177.)	208. (223.)	406. (421.)
Total with full incentives	163. (177.)	208. (222.)	406. (420.)
b. Costs using conventional reference system	179.	231.	4s8.

C. EFFECTIVE COST OF ENERGY TO CONSUMER

(Conventional reference system is SF-5)

Levelized cost of solar energy or 'conservation' energy[c]	Type of incentives given: No incentives	20% ITC	Full incentives
$/MMBtu primary fuel	.54 (4.94)	.48 (4.89)	.39 [4.69)
¢/kWh electricity	.64 (5.82)	.56 (5.75)	.45 (5.52)

Levelized price paid for conventional energy[b,e]	Escalation of conventional energy costs: Constant real energy prices	Energy price escalation I	Energy price escalation II
$/MMBtu primary fuel	4.82	5.99	11.15
¢/kWh electricity	5.67	7.05	13.12

ANNUAL ENERGY FLOWS

(Conventional reference system is SF-5)

	Energy consumed by ref. system	Backup consumed w/ 5010r/conservation	Energy saved (% of total)
Net Electricity (bought-sold) (MWh/unit)	11.5	11.9	-3.5
Fuel consumed onsite (MMBtu/unit)	205.	161.	21.4
Total energy requirement (bbl crude equiv.)[a]	71.	63.	11.5
Electricity sold to grid annually (MWh, entire building)			o.
Annual peak electricity demand (kW, entire building)			5.2

Table IV-10.— Albuquerque: Conventional System — Insulated Single Family House Using Oil Heating and Central Electric A/C (IF-5)

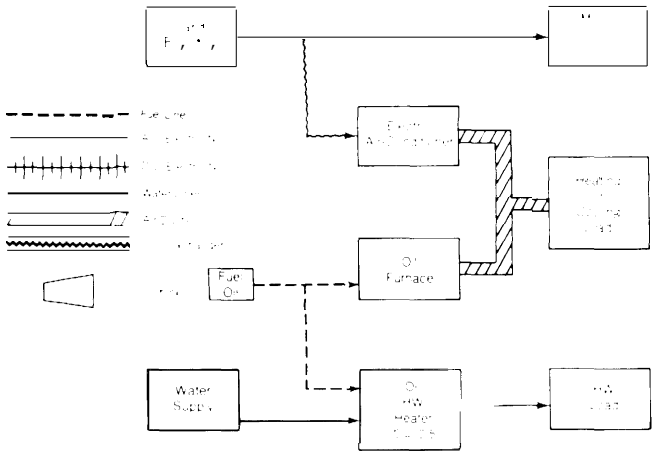

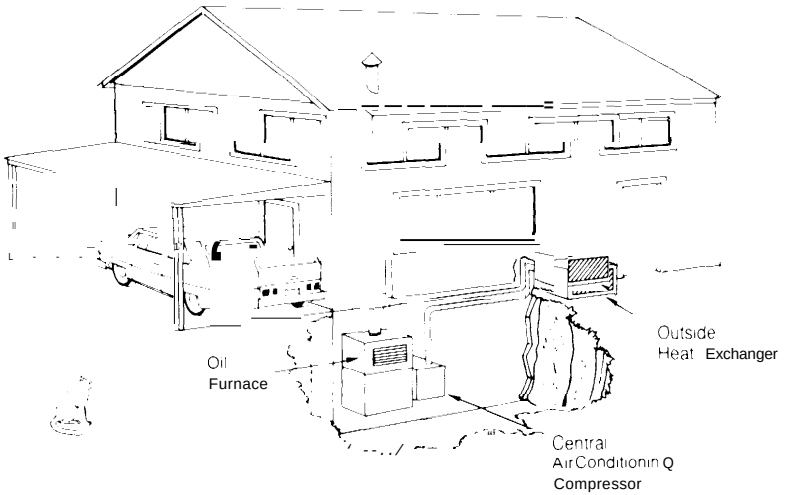

A. ITEMIZED COST OF COMPONENTS

Component	Size	Unit cost	First cost (incl. O&P)	Annual O&M	Life (yrs)
1. Oil furnace ..	31M Btuh	23 $/M Btuh	$713	$30	15
2. Ductwork	—	—	425	0	30
3. Central electric a/c . . .	1.3 tons	430 $/ton	559	30	10
4 Gas water heater	40 gal	225 ea.	225	0	15
5. Extra insulation, storm doors and windows	—	—	981	0	30
TOTAL			$2,903	$60	

B. LEVELIZED MONTHLY COSTS PER UNIT TO CONSUMER (Dollars)[bc]

(Conventional reference system is SF-5)

	Escalation of conventional energy costs					
	Constant real energy prices		Energy price escalation I		Energy price escalation II	
1. 1976 Startup						
a. Costs using solar (conservation) system:						
Total with no incentives	153.	(167.)	180.	[194.)	298.	(313.)
Total with 20% IT...	152.	[166.)	179.	(194.]	298.	(312.)
Total with full incentives	150.	[165.)	177.	(192.)	296.	(310.)
b. Costs using conventional reference system	*179.*		*212.*		*358.*	
2. 1985 Startup[d]						
a. Costs using solar (conservation) system:						
[capital related costs)	33.	(47.)	33.	(47.)	33.	(47.)
(operation & maintenance costs)	9.	(9.)	9.	[9.)	9.	(9.)
(fuel bill)	65.	(65.)	89.	(89.)	198.	(198.)
(electric bill)	46.	(46.)	65.	(65.)	140.	(140.)
Total with no incentives	153.	(167.)	195.	(209.)	379.	(394.)
Total with 20% ITC	152.	(166.)	194.	(209.)	379.	(393.)
Total with full incentives	150.	(165.)	192.	(207.)	377.	(391.)
b Costs using conventional reference system	*179.*		*230.*		*458.*	

C. EFFECTIVE COST OF ENERGY TO CONSUMER

(Conventional reference system is SF-5)

Levelized cost of solar energy or 'conservation' energy'	Type of incentive! given					
	No incentives		20% ITC		Full incentives	
$/MMBtu primary fuel.	-.08	(2.69)	-.21	(2.58)	-.51	(2.21)
¢/kWh electricity	-.10	(3.16)	-25	(3.03)	.60	(2 60)

Levelized price paid for conventional energy[be]	Escalation of conventional energy costs		
	Constant real energy prices	Energy price escalation I	Energy price escalation II
$/MMBtu primary fuel.	482	5 w-	11.15
¢/kWh electricity . . , ...	*567*	*705*	*13.12*

ANNUAL ENERGY FLOWS (Conventional reference system is SF-5)

	Energy consumed by ref. system	Backup consumed w/ solar/conservation	Energy saved (% of total)
Net Electricity (bought-sold) (MWh/unit)	11.5	10.7	6.5
Fuel consumed onsite (MMBtu/unit)	205.	151.	26.4
Total energy requirement (bbl crude equiv.)[a]	71.	58.	18.5
Electricity sold to grid annually (MWh, entire building)			0.
Annual peak electricity demand (kW, entire building)			4.3

Table IV-11.—Albuquerque: Solar Hol Water System—Single Family House Using Fiat. Plate Collectors (1977 Prices); Building Equipped With SF-5 Space-Conditioning

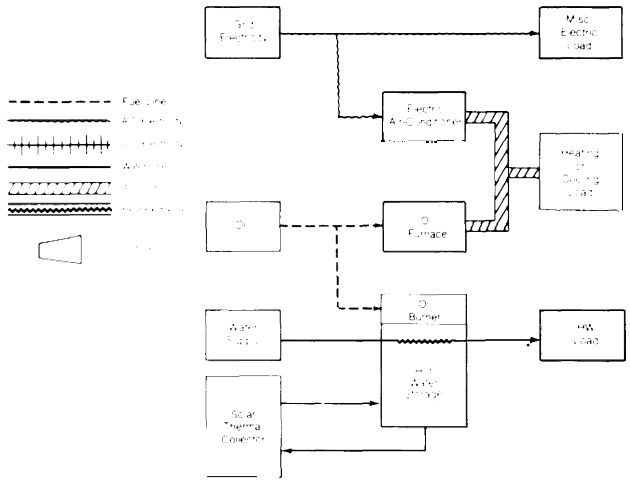

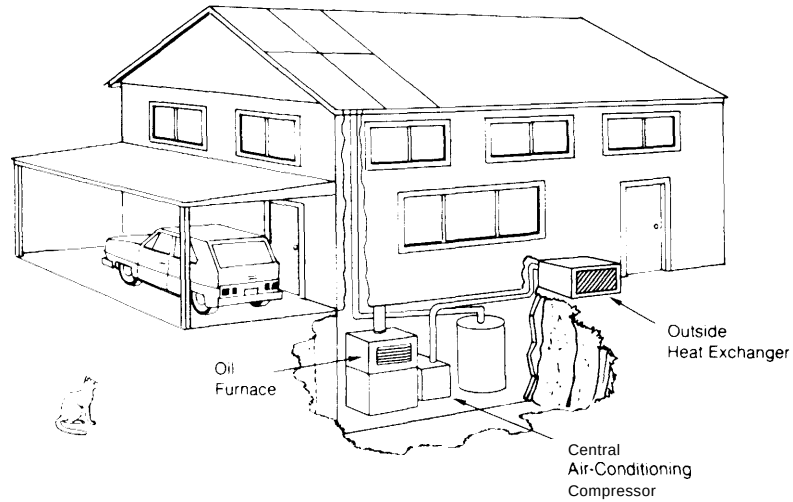

A. ITEMIZED COST OF COMPONENTS

Component	Size	Unit cost	First cost (incl. O&P)	Annual O & M	Life (yrs)
1. Oil furnace	45M Btuh	23 $/M Btuh	$1,030	$30	15
2 Ductwork	—	—	425	0	30
3. Central electric O/c	1.85 tons	430 S/ton	796	30	10
4. Hot water storage with electric backup (including heat exchanger).	100 gal	$380	380	0	30
5 Pumps and control	—	$250	250	0	10
6. Insulated steel pipe	75 ft	$2.6/ft	195	0	30
7 Flat plate solar collectors	10 m'	143 $/m'	"715	o	30
—Collector cost @ 95 $/m'			● 715	o	15
——Installation @ 16 $/m'					
——Transportation @ $3/m					
—Overhead and profit= 25%					
TOTAL			$4,506	$60	

• ½ installed collector cost assumed replaced in 15 yrs., with total replacement in 30 yrs

ANNUAL ENERGY FLOWS

(Conventional reference system is SF-5)

	Energy consumed by ref. system	Backup consumed w/ salar/conservation	Energy saved (% of total)
Net Electricity (bought-sold)(MWh/unit)	11.5	11.3	1.7
Fuel consumed onsite (MMBtu/unit)	205.	146.	28.7
Total energy requirement (bbl crude equiv.)[a]	71	5a.	18.0
Electricity sold to grid annually (MWh, entire building)			0.
Annual peak electricity demand (kW, entire building)			5.2

B. LEVELIZED MONTHLY COSTS PER UNIT TO CONSUMER (Dollars)[b,c]

(Conventional reference system is SF-5)

	Escalation of conventional energy costs		
	Constant real energy prices	Energy price escalation I	Energy price escalation II
1. 1976 Startup			
a. Costs using solar (conservation) system:			
Total with no incentives	174. (197.)	201. (224.)	319. (342.)
Total with 20% IT	171. (194.)	198. [221.)	316. (339.)
Total with full incentives	166. (185.)	194. (212.)	312. (330.)
b. Costs using conventional reference system	179.	212.	358.
2. 1985 Startup[d]			
0. Costs using solar (conservation) system:			
(capitol related costs)	54. (77.)	54. (77.)	54. (77.)
(operation & maintenance costs)	9. [9.)	9. (9.)	9. [9.]
(fuel bill)	63. (63.)	B6. (86.)	191. (191.)
(electric bill)	48. (48.)	67. (67.)	146. (146.)
Total with no incentives	174. (197.)	216. (239.)	400. (423.)
Total with 200/. IT	171. (194.)	213. ' (236.)	397. (420.)
Total with full incentives	166. (185.)	209. [227.)	393. [41 1.)
b. Costs using conventional reference system	179.	231.	458.

C. EFFECTIVE COST OF ENERGY TO CONSUMER

(Conventional reference system is SF-5)

Levelized cost of solar energy or 'conservation' energy[c]	Type of incentives given: No incentives	20% ITC	Full incentives
$/MMBtu primary fuel	4.10 (8.58)	3.46 (8.03)	2.62 (6.22)
¢/kWh electricity	4.83 (10.10)	4.08 (9.46)	3.09 (7.32)

Levelized rice paid for conventional energy[b,e]	Escalation of conventional energy costs: Constant real energy prices	Energy price escalation I	Energy price ● scalation II
$/MMBtu primary fuel	4.82	5.99	11.15
t/k Wh electricity	5.67	7.05	13.12

Table IV·12.—Albuquerque: Solar Hot Water and Heating System—Single Family House Using Flat-Plate Collectors (1977 Prices); Low-Temperature Thermal Storage; Building Equipped With SF-5 Space-Conditioning

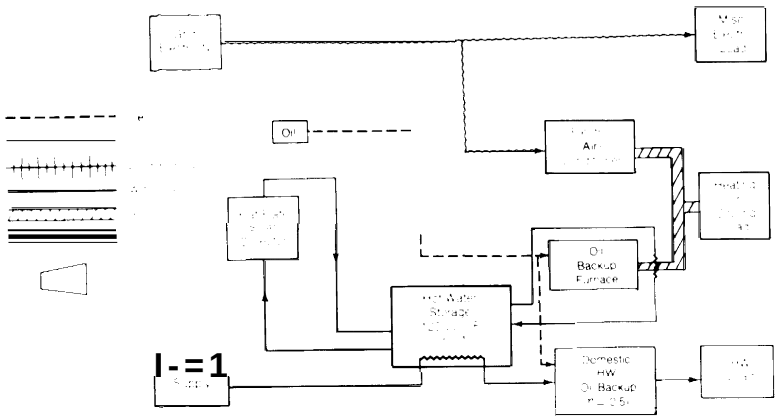

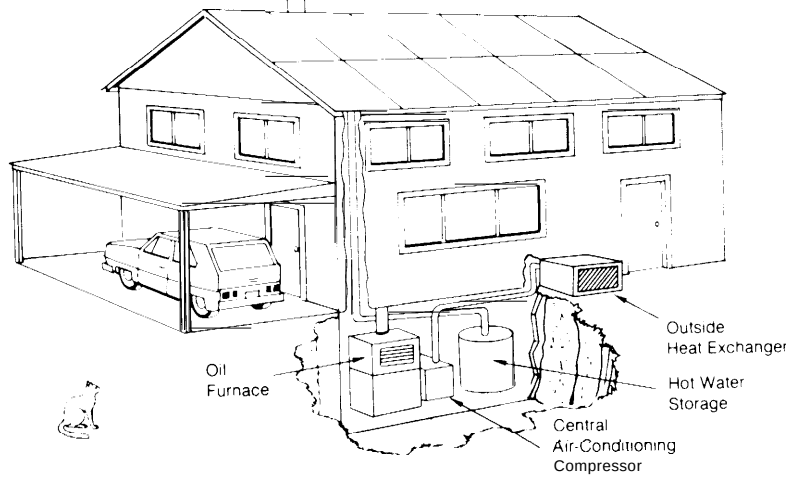

A. ITEMIZED COST OF COMPONENTS

Component	Size	Unit cost	First cost (incl. O & P)	Annual O&M	Life (yrs)
1 Oil furnace	45M Btuh	23 $/M Btuh	$1,030	$30	15
2. Central electric a/c	1 85 tons	430 $/ton	796	30	10
3. Ductwork		—	425	0	30
4. Collectors and associated costs	45 m'	143 $/m²	'3,218	0	15
——Collectors @ 95 $/m'			● 3,21B	0	30
——Installation @ 16 $/m*					
——Transportation @ 3 $/m²					
——25"/. overhead and profit					
5. ¾"insulated steel pipe	125 f?	$4.1	513	0	30
6. Storage (without plumbing)	200 kWh	$2.05/kWh	410	0	30
7. Pump, controls, and heat exchanger		$650	650	0	10
TOTAL			$10,260	$60	

. il, installed collector cost assumed replaced in 15 yrs., with total replacement in 30 yrs

ANNUAL ENERGY FLOWS

(Conventional reference system is SF-5)

	Energy consumed by ref. system	Backup consumed w/ solar/conservation	Energy saved (% of total)
Net Electricity (bought sold) (MWh/unit)	11.5	11.3	1.7
Fuel consumed onsite (MMBtu/unit)	205.	53.	74.1
Total energy requirement (bbl crude equiv.)[a]	71.	39.	45.4
Electricity sold to grid annually (MWh entire building)			o.
Annual peak electricity demand (kW, entire building)			5.2

B. LEVELIZED MONTHLY COSTS PER UNIT TO CONSUMER (Dollars)[b,c]

(Conventional reference system is SF-51

	Escalation of conventional energy costs: Constant real energy prices	Energy price escalation I	Energy price escalation II
1 1976 Startup			
0. Costs using solar (conservation) system:			
Total with no incentives	196. [246.)	213. (264.)	289. (339.)
Total with 20% ITC	183. (235.)	201. (253.)	276. (328.)
Total with full incentives	167. (200.)	184. (218.)	260. (293.)
b. Costs using conventional reference system	179.	212.	358.
2. 1985 Startup[d]			
0. Costs using solar (conservation) system:			
(capitol related costs)	116. (167.)	116. (167.)	116. [167.)
(operation & maintenance costs)	9. (9.)	9. (9.)	9. (9.)
(fuel bill)	23. (23.)	31. (31.)	69. (69.)
(electric bill)	48. (43.)	67. (67.)	146. [146.)
Total with no incentives	196. (246.)	223. [274.)	340. (391.)
Total with 20% IT	183. (235.)	211. [263.)	328. (380.)
Total with full incentives	167. (200.)	194. (227.)	311. (344.)
b Costs using conventional reference system	179.	231.	4s8.

C. EFFECTIVE COST OF ENERGY TO CONSUMER

[Conventional reference system is SF-5)

	Type of incentives given: No incentives	20% ITC	Full incentives
Levelized cost of solar energy or 'conservation' energy[c]			
$/MMBtu primary fuel	6.42 (10.34)	5.45 [9.51)	4.17 [6.75)
¢/kWh electricity	7.56 [12.17)	6.41 (1 1.19)	4.91 (7.94)
	Escalation of conventional energy costs: Constant real energy prices	Energy price escalation I	Energy price escalation II
Levelized price paid for conventional energy[b,e]			
$/MMBtu primary fuel	482	5.9P	11 15
¢/kWh electricity	5.67	7.05	1312

Table IV-13.-Albuquerque: Conventional System-Single Family House With Gas Heat and Hot Water and Gas-Powered Absorption A/C (IF-7)

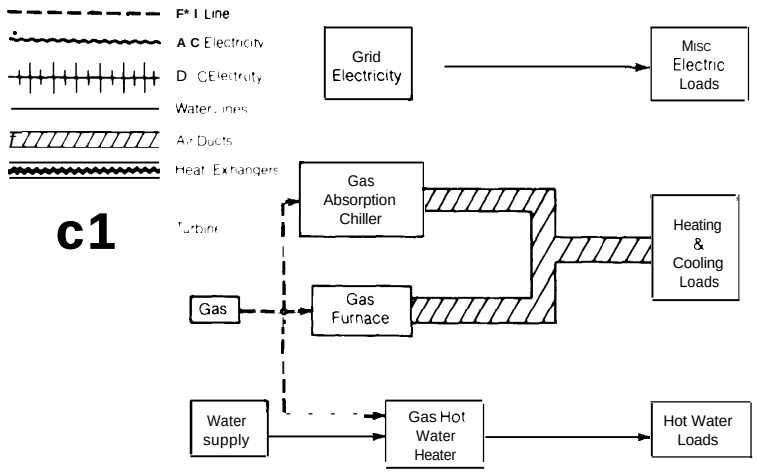

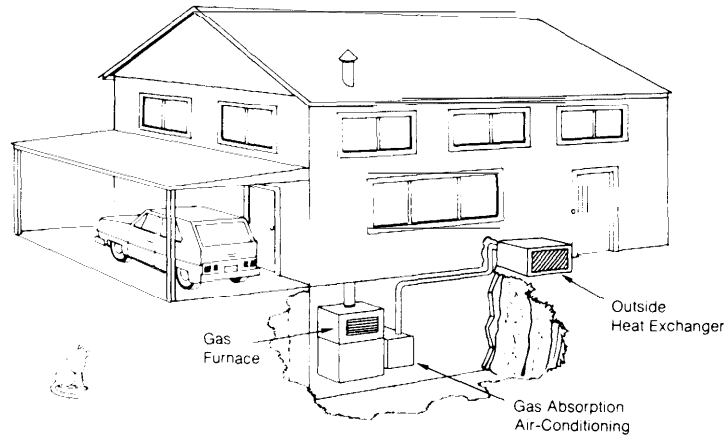

A. ITEMIZED COST OF COMPONENTS

Component	Size	Unit cost	First cost (incl O&P)	Annual O&M	Life (yrs)
1. Gas furnace	45 MBtuh	15$ MBtuh	$675	$0	15
2 Ductwork	.—	—	425	0	30
3 Central absorption A/C	1.85 tons	850 $/ton	1,570	20	15
4 Gas water heater	40 gal.	225 ea.	225	0	15
TOTAL FOR BUILDING			$2,895	$20	

B. LEVELIZED MONTHLY COSTS PER UNIT TO CONSUMER (Dollars)[b,c]

[Conventional reference system is SF-7)

	Escalation of conventional energy costs					
	Constant real energy prices		Energy price escalation I		Energy price escalation II	
1. 1976 Startup						
Total with no incentives	122.	(138.)	165.	[180.)	233.	(249.)
Total with 20% IT	122.	[138.)	165.	(180.)	233.	[249.)
Total with full incentives	122.	(138.]	165.	(180.)	233.	(249.)
2. 1985 Startup[d]						
(capital related cost	35.	(50.)	35.	(50.)	35.	(50.)
(operation & maintenance costs)	3.	(3.)	3.	(3.)	3.	(3.)
[fuel bill)	47.	(47.)	97.	(97.)	143.	(143.)
(electric bill)	37.	[37.)	53.	(53.)	114.	(114.)
Total with no incentives	122.	(138.)	187.	(203.)	295.	(310.)
Total with 20% IT	122.	(138.)	187.	(203.)	295.	(310.)
Total with full incentives	122.	(138.)	187.	(203.)	295.	(310.)

ANNUAL ENERGY FLOWS

[Conventional reference system is SF-7)

	Energy consumed by ref. system	Backup consumed w/ salar/conservation	Energy saved (% of total)
Net Electricity (bought-sold) (MWh/unit)	8.0	8.0	0.
Fuel consumed onsite (MMBtu/unit)	218.	218.	0.
Total energy requirement (bbl crude equiv.)[a]	65.	65.	0.
Electricity sold to grid annually (MWh, entire building)			o.
Annual peak electricity demand (kW, entire building)			3.5

C. EFFECTIVE COST OF ENERGY TO CONSUMER

(Conventional reference system is SF-7)

	Type of incentives given					
Levelized cost of solar energy or 'conservation' energy'	No incentive		20% ITC		Full incentives	
$/MMBtu primary fuel	N/A	(N/A)	N/A	(N/A)	N/A	(N/A)
¢/kWh electricity	N/A	IN/A)	N/A	IN/A)	N/A	(N/A)
	Escalation of conventional energy costs					
Levelized price paid for conventional energy[b,e]	Constant real energy prices		Energy price escalation I		Energy price escalation II	
$/MMBtu primary fuel	*3.25*		*4.87*		*7.51*	
e/k Wh electricity	3.82		5.73		8.84	

Table IV-14.-Albuquerque: Solar Hot Water, Heating, and Cooling System—Single Family House Using Flat-Plate Collectors (1977 Prices); Low-Temperature Thermal Storage; Building Equipped With SF-7 Space-Conditioning

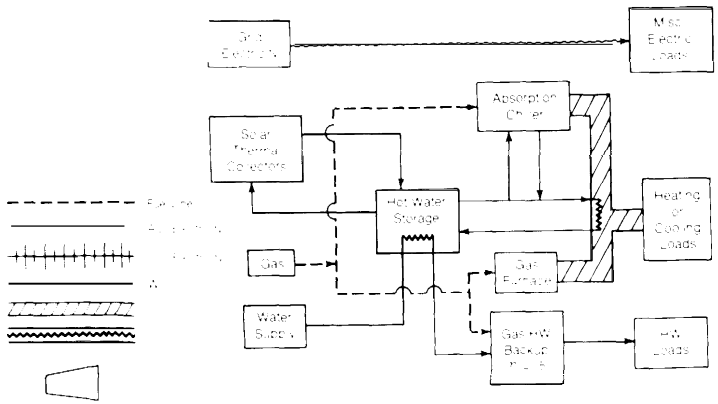

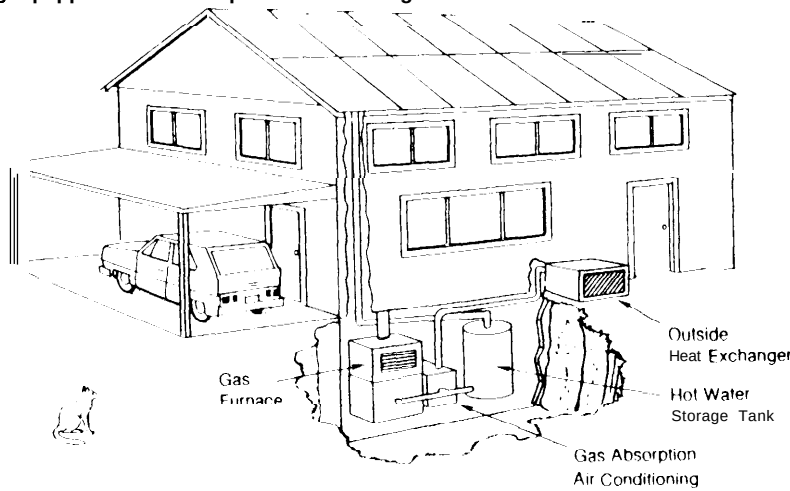

A. ITEMIZED COST OF COMPONENTS

Component	Size	Unit cost	First cost (incl O&P)	Annual O & M	Life (yrs)
1. Gas furnace..	45 MBtuh	15$ MBtuh	$660	$0	15
2 Ductwork	—	—	425	0	30
3. Absorption A/C.	1 85 tons	850 $/ton	1,570	20	15
4 Storgae tank .... ,	200 kWh	2.05 $/kWh	410	0	30
5 Heat exchanger, pump, and controls —		—	650	0	10
6 Insulated steel pipe ..	125 ft.	4.1 $/ft.		o	30
7 Flat plate solar collectors.	45 m²	143 $/m²	.3218	0	30
—Collector cost @ 95 $/m²			.3218	0	15
—Installation @ 16 $/m²					
—Transportation @ 3 $/m²					
—Overhead and profit equals 25 percent					
TOTAL FOR BUILDING			$13,729	$2000	

installed collector cost assumed replaced in 15 yrs with total replacement in 10 yrs

ANNUAL ENERGY FLOWS

(Conventional reference system is SF-7)

	Energy consumed by ref. system	Backup consumed w/ solar/conservation	Energy saved [% of total]
Net Electricity (baught-said) (MWh/unit).....	8.0	8.0	
Fuel consumed onsite (MMBtu/unit).....	218.	42.	80°7
Total energy requirement (bbl crude equiv.)[a].....	65.	28.	56.2
Electricity sold to grid annually (MWh, entire building).....			0.
Annual peak electricity demand (kW, entire building).....			3.5

B. LEVELIZED MONTHLY COSTS PER UNIT TO CONSUMER (Dollars)[b,c]

(Conventional reference system is SF-7)

	Escalation of conventional energy costs: Constant real energy prices	Energy price escalation I	Energy price escalation II
1. 1976 Startup			
0. Costs using solar (conservation) system:			
Total with no incentives.....	167. [219.)	1 B3. (235.)	228. (280.)
Total with 20% IT.....	154. (208.)	170. [224.)	215. (269.)
Total with full incentives.....	138. (173.)	154. (189.)	199. (234.]
b. Costs using conventional reference system	122.	165.	233.
2. 1985 Startup[d]			
a. Costs using solar (conservation) system:			
(capital related casts).....	117. (170.)	117. (170.)	117. (170.]
(operation & maintenance costs).....	3. (3.)	3. (3.)	3. [3.)
(fuel bill).....	9. (9.)	19. (19.)	28. (28.)
(electric bill).....	37. (37.)	53. (53.)	114. (1 14.)
Total with no incentives.....	167. (219.)	192. (244.)	262. (314.)
Total with 20% IT.....	154. [208.)	179. (233.)	249. (304.)
Total with full incentives	138. (173.)	163. (198.)	233. (268.)
b. Costs using conventional reference system	122.	187.	295.

C. EFFECTIVE COST OF ENERGY TO CONSUMER

(Conventional reference system is SF-7)

Levelized cast of solar energy or 'conservation' energy[c]	Type of incentives given: No incentives	20% ITC	Full incentives
$/MMBtu primary fuel.....	5.64 (9.21)	4.7B (8 48)	3.66 (6.05]
¢/kWh electricity.....	6.63 (10.83)	5.63 (99B)	431 (7 12)

Levelized price paid for conventional energy[b,e]	Escalation of conventional energy costs: Constant real energy prices	Energy price escalation I	Energy price escalation II
$/MMBtu primary fuel.	3 25"	4 8 7	751
t/k Wh electricity	3 8 2	5 7 3	8.84

Table IV-15.—Albuquerque: Solar Hot Water, Heating, and Cooling System—Single Family House Using Flat-Plate Collectors (Possible Future Price), Low-Temperature Thermal Storage; Building Equipped With SF-7 Space. Conditioning

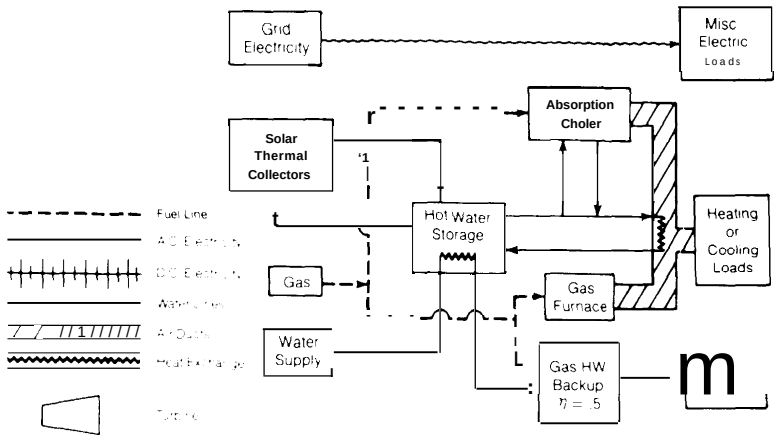

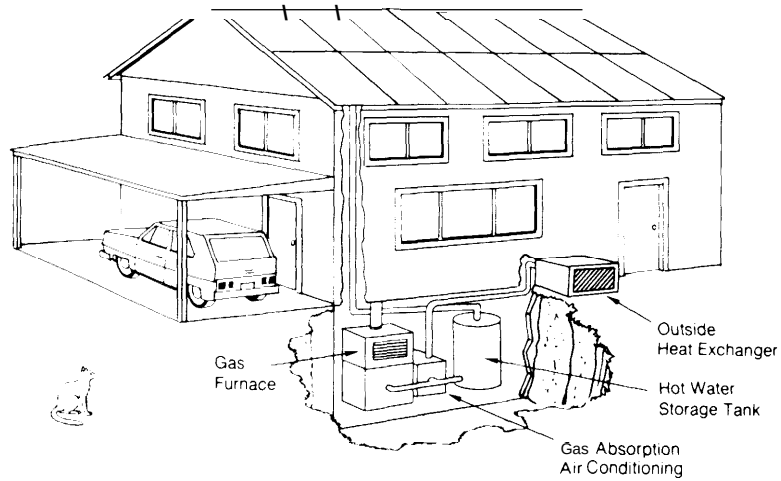

A. ITEMIZED COST OF COMPONENTS

Component	Size	Unit cost	First cost (incl O&P)	Annual O&M	Life (yrs)
1. Gas furnace	45 MBtuh	15 $ MBtuh	$675	0	15
2. Ductwork	—	—	425	0	30
3. Absorption a/c	1.85 tons	850 $/ton	1,570	$20	15
4. Storage tank	200 kWh	2.05 $/kWh	410	0	30
5. Heat exchanger, pump, and controls	—	—	500	0	10
6. Insulated steel pipe	125 ft.	4.1 $/ft	513	0	30
7. Flat plate solar collectors	45 m²	86 $/m²	[a] 1 935	o	30
—Collector cost @ 50 $/m²			[a] 1 935	0	15
—Installation @ 16 $/m²					
—Transportation @ 3 $/m²					
—overhead and profit = 25%					
TOTAL			$7,963	$20	

[a] installed collector cost assumed replaced m 15 yrs with total replacement in 30 yrs

B. LEVELIZED MONTHLY COSTS PER UNIT TO CONSUMER (Dollars)[bc]

(Conventional reference systemis SF-7)

	Escalation of conventional energy costs					
	Constant reel energy prices		Energy price escalation 1		Energy price escalation II	
1 1976 Startup						
a. Costs using solar (conservation) system.						
Total with no incentives	137	(177)	153.	(193)	198	(238.)
Total with 20% ITC	129	(170)	145	(186.)	190	(231.)
Total with full incentives	110	(147)	126.	(163.)	171	(208.)
b. Costs using conventional reference system	122		164.		233.	
2 1985 Startup[d]						
a. Costs using solar (conservation) system:						
(capitol related costs)	87.	[128.)	B7.	(128.)	87	(128.)
(operation & maintenance costs)	3	(3)	3	(3)	3.	[3.)
(fuel bill)	9	(9)	19.	(19.)	28	(28.)
(electric bill)	37.	(37.)	53	(53.)	114.	(114)
Total with no incentives	137	[177)	161.	[202.)	232	[272)
Total with 20% IT	129	(170.)	153.	(195.)	224	(265)
Total with full incentives	110	(147)	135.	(172)	205	[242.]
b Costs using conventional reference system	122		187		295.	

C. EFFECTIVE COST OF ENERGY TO CONSUMER

(Conventional reference system is SF-7)

Levelized cost of solar energy or 'conservation' energy'	Type of incentives given					
	No incentives		20% ITC		Full incentives	
$ / MMBtu primary fuel	361	(6 36)	3.05	(5.88)	1.79	(4.30)
¢/kWh electricity	4.24	[7 48)	3.59	[6.93)	210	[5.06)

Levelized price paid for conventional energy[bc]	Escalation of conventional energy costs		
	Constant real energy prices	Energy price escalation I	Energy price escalation II
$/MMBtu primary fuel	3.25	4.87	7.51
¢ kWh electricity	*3 8 2*	*5.73*	*884*

ANNUAL ENERGY FLOWS

(Conventional reference system is SF-7)

	Energy consumed by ref system	Backup consumed w, solar/conservation	Energy saved (%. of total)
Net Electricity (bought-sold) (MWh, unit)	8.0	8 0	0
Fuel consumed onsite (M MBtu/unit)	218	42.	80.7
Total energy requirement (bbl crude equiv)[a]	65	28.	56.2
Electricity sold to grid annually (MWh, entire building)			0
Annual peak electricity demand (kW, entire building)			3.5

Table IV-16.—Albuquerque: Conventional System—Insulated Single Family House With Gas Heat, Hot Water, and Gas-Powered Absorption A/C (IF-7)

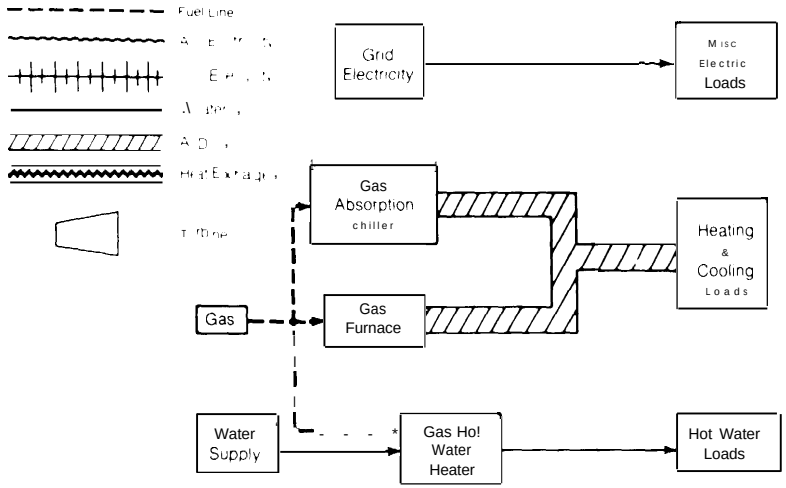

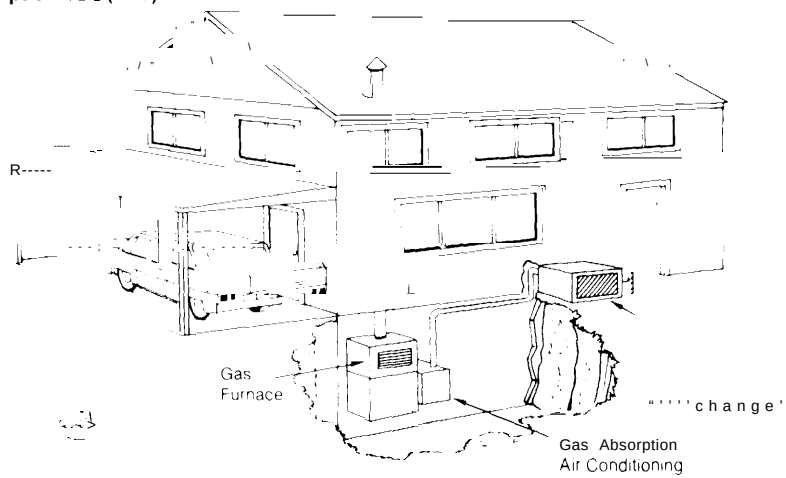

A. ITEMIZED COST OF COMPONENTS

Component	Size	Unit cost	First cost (incl. O&P)	Annual O & M	Life (yrs)
1. Gas furnace	31 MBtuh	15 $/MBtuh	$465	0	15
2. Ductwork	—	—	425	0	30
3. Central absorption a/c	1,3 tons	850 $/ton	1,100	$20	15
4. Gas water heater	40 gal.	225 ea.	225	0	15
5 Extra insulation, storm doors and windows	—	—	981	0	30
TOTAL FOR BUILDING			$3,196	$20	
TOTAL PER UNIT			$3,196	$20	

B. LEVELIZED MONTHLY COSTS PER UNIT TO CONSUMER (Dollars)[b,c]

(Conventional reference system is IF-71

	Escalation of conventional energy costs					
	Constant real energy prices		Energy price escalation I		Energy price escalation II	
1. 1976 Startup						
Total with no incentives	110.	(126.)	145.	(161.)	206.	(222.)
Total with 207. IT	110.	(126.)	145.	[161.)	206.	[222.)
Total with full incentives	110.	(126.)	145.	(161.)	206.	(222.)
2. 1985 Startup[d]						
(capital related costs)	34.	(49.)	34.	(49.)	34,	(49.}
(operation & maintenance costs)	3.	(3.)	3.	(3.)	3.	(3.)
(fuel bill)	37.	[37.]	75.	(75.)	111.	(111.)
(electric bill)	37.	[37.)	52.	(52.)	112.	(112.]
Total with no incentives	110.	[126.)	163.	[179.)	264).	(276.)
Total with 20% ITC	110.	(126.)	163.	(179.)	260.	[276.)
Total with full incentives	110.	(126.)	163.	(179.)	260.	(276.)

C. EFFECTIVE COST OF ENERGY TO CONSUMER

(Conventional reference system is IF-~

Levelized cost of solar energy or 'conservatism' energy[c]	Type of incentives given					
	No incentives		20% ITC		Full incentive	
$/MMBtu primary fuel	N/A	(N/A)	N/A	[N/A)	N/A	(N/~
¢/kWh electricity	N/A	(N/A)	N/A	[N/A)	N/A	(N/A]
	Escalation of conventional energy costs					
Levelized price paid for conventional energy[b,e]	Constant real energy prices		Energy price escalation I		Energy price escalation II	
$/MMBtu primary fowl	3.37		4.97		7 7 9	
a/k Wh electricity	3.96		5.84		9.17	

ANNUAL ENERGY FLOWS (Conventional reference system is IF-7)

	Energy consumed by ref. system	Backup consumed w/ solar/conservation	Energy saved (% of total)
Net Electricity (bought-sold) (MWh/unit)	7.8	7.8	0
Fuel consumed onsite (MMBtu/unit)	169.	169.	0.
Total energy requirement (bbl crude equiv.)[a]	54.	54.	0.
Electricity sold to grid annually (MWh, entire building)			0.
Annual peak electricity demand (kW, entire building)			3.4

Table IV-17.-Albuquerque: Solar Heat Engine Cogeneration System—Insulated Single Family House Using ORCS With Cooling Tower, One-Axis Tracking Collector (Possible Future Design), Low. Temperature Thermal Storage; Building Equipped With IF-7 Space-Conditioning

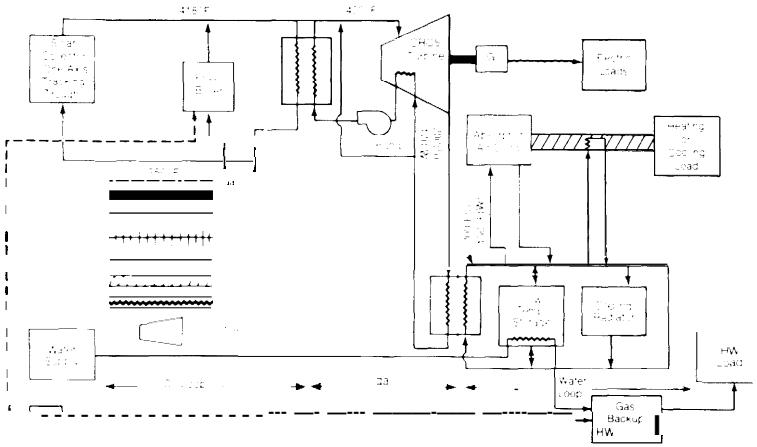

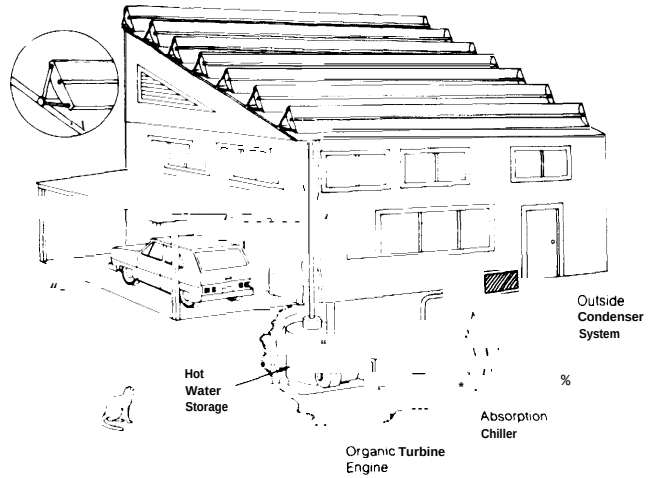

ITEMIZED COST OF COMPONENTS

Component	Size	Unit cost	First cost [incl. O&P]	Annual O&M	Life (yrs.)
1 1-axis E-W tracking collector	46 m'	129 $/m'	$2,970	0	30
——Collector @ 80 $/m'			2,970	0	15
——Installation @ 20 $/m'					
——Shipping @ 3 $/m²					
——Overhead and profit @ 25%					
2 Hot water storage	200 kWh	2 $/kWh	400	o	30
3. Fossil boiler—cast iron	21.7	47 $/kW	1,000	0	15
4 Absorption a/c	1.3 tons	850 $/ton	1,100	$20	10
5. Water-to-air heot exchanger	9	10 $/ton	90	0	15
6 Insulated steel pipe	125 ft	4.1 $/ft	513	0	30
7. Heat ● xchanger, pumps and controls.	—	—	500	o	10
8. Ductwork	—	—	425	0	30
9 Extra insulation, storm doors and windows	—	—	981	0	30
10. Organic turbine (installed with cooling tower, controls, and high temperature heat exchanger, and generator).	4.3 kW	490$/kW	2,110	30	15
TOTAL			$13,059,000	$50	

* ', installed collector cost assumed replaced in t 5 yrs with total replacement in .30 yrs

ANNUAL ENERGY FLOWS (Conventional reference system is IF-7)

	Energy consumed by ref. system	Backup consumed w/ solar/conservation	Energy saved (% of total]
Net Electricity (bought-sold) (MWh/unit)	7.8	0.	100.0
Fuel consumed onsite (MMBtu/unit)	169.	151.	10.8
Total energy requirement (bbl crude equiv.)[a]	54.	31.	42.2
Electricity sold to grid annually (MWh, entire building)			0.
Annual peak electricity demand (kW, entire building)			0.

B. LEVELIZED MONTHLY COSTS PER UNIT TO CONSUMER (Dollars)[b,c]

(Conventional reference system is IF-7)

	Escalation of conventional energy costs: Constant real energy prices	Energy price escalation I	Energy price escalation II
1. 1976 Startup			
a. Costs using solar (conservation) system:			
Total with no incentives	184. (249.)	206. (271.)	226. (291.)
Total with 20% ITC	168. (236.)	191. (258.)	211. (278.)
Total with full incentives	134. (192.)	156. (215.)	177. (235.)
b. Costs using conventional reference system	110.	145.	206.
2. 1985 Startup[d]			
a. Costs using solar (conservation) system:			
(capital related casts	14. (209.)	144. (209.)	144. (209.)
[operation & maintenance costs)	7. (7.)	7. (7.)	7. (7.)
(fuel bill)	33. (33.)	67. (67.)	99. (w.)
(electric bill)	o. (o.)	0. (o.)	o. (0.)
Total with no incentives	184. (249.)	218. [283.)	250. [315.)
Total with 20% IT	168. (236.)	203. (270.)	235. (302.)
Total with full incentives	134. [192.]	168. (227.)	200. [259.)
b. Costs using conventional reference system	110.	163.	2150.

C. EFFECTIVE COST OF ENERGY TO CONSUMER

(Conventional reference system is IF-7)

Levelized cost of solar energy or "conservation" energy[c]	Type of incentives given: No incentives	20% ITC	Full incentives
$/MMBtu primary fuel	12.46 (19.53)	10.80 (18.1 1)	7.02 [13.39)
¢/kWh electricity	14.66 (22.99)	12.71 (21.32)	8.27 (15.76)

Levelized price paid for conventional energy[b,e]	Escalation of conventional energy costs: Constant real energy prices	Energy price escalation I	Energy price escalation II
$/MMBtu primary fuel	3.37	4.97	7.79
4/k Wh electricity	3.96	5.84	9.17

Table IV-1 8.—Albuquerque: Solar Heat Engine Cogeneration System—Insulated Single Family House Using ORCS With Cooling Tower, One-Axis Tracking Collector (Possible Future Design), High-Temperature Thermal Storage, Gas Backup; Building Equipped With IF-7 Space-Conditioning

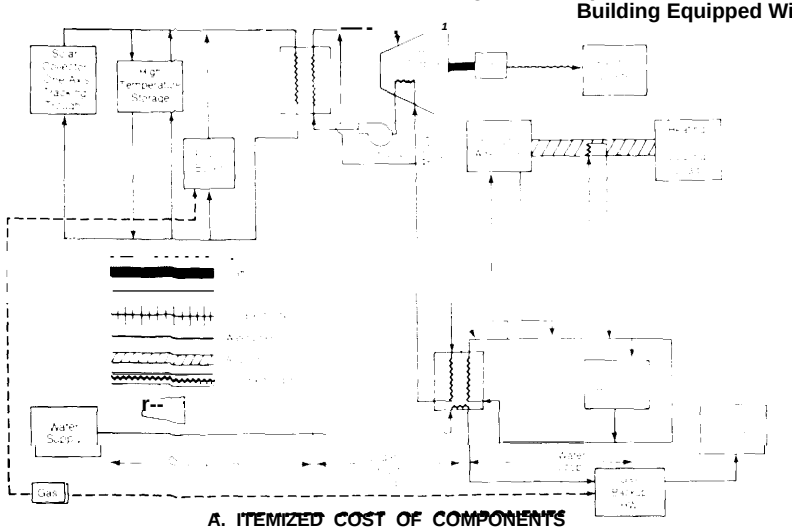

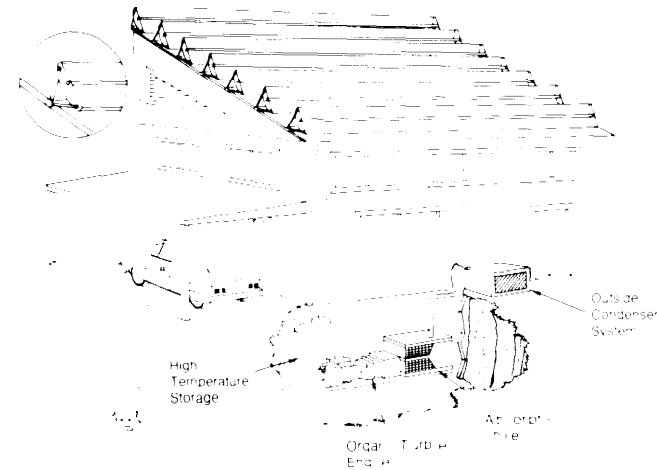

A. ITEMIZED COST OF COMPONENTS

Component	Size	Unit cost	First cost (incl O&P)	Annual O&M	Life (yrs)
1. One axis E–W tracking collector	46 m²	129 $/m²	$,2970	0	30
——Collector @ 80 $/m²			2970	0	15
——Installation @ 20$/m²					
—Shipping @ 3$/m²					
——overhead and profit 25%					
2 High temperature oil storage	80 kWh	19 $/kWh	1,520	0	30
3. Fossil bailer-cast iron	21.7 kW	47 $/kW	1,000	0	15
4 Absorption a/c	1.4 tons	850 $/ton	1,200	S20	10
5 Water-to-air heat exchanger	9 kW	10 $/kW	90	0	15
6. Insulated steel pipe	125 ft	4.1 $/ft	513	0	30
7 Heat exchanger, pumps and controls	—	—	500	o	10
8. Ductwork	—	—	425	0	30
9. Extra insulation, storm doors and windows	—	—	981	0	30
10. Organic turbine (installed with coaling tower, controls, and high temp heat exchanger, and generator.	4.3 kW	490 $/kW	2,110	30	15
TOTAL FOR BUILDING			$14,279	$50	
TOTAL PER UNIT			$14,279	$50	

. ' installed collector cost assumed replaced in 15 yrs with total replacement in 30 yrs

ANNUAL ENERGY FLOWS (Conventional reference System is IF-7)

	Energy consumed by ref. system	Backup consumed w/ solar/conservation	Energy saved (% of total)
Net Electricity (bought-sold) (MWh/unit)	7.8	0.	100.0
Fuel consumed onsite (MMBtu/unit)	169.	84.	50.3
Total energy requirement (bbl crude equiv.)[a]	54.	17.	67.8
Electricity said to grid annually (MWh, entire building)			0.
Annual peak electricity demand (kW, entire building)			0.

B. LEVELIZED MONTHLY COSTS PER UNIT TO CONSUMER (Dollars)[b,c]

(Conventional reference system is IF-7)

	Escalation of conventional energy costs		
	Constant real energy prices	Energy price escalation I	Energy price escalation II
1. 1976 Startup			
a. Costs using solar (conservation) system:			
Total with no incentives	183. (255.)	196. (268.)	207. (279.)
Total with 20% ITC	166. (240.)	178. (253.)	189. (264.)
Total with full incentives	125. (189.)	138. (202.)	149. (213.)
b. Costs using conventional reference system	110.	14.5.	206.
2. 1985 Startup[d]			
a. Costs using solar (conservation) system:			
(capital related costs)	158. (230.)	158. (230.)	158. (230.)
(operation & maintenance costs)	7. (7.)	7. (7.)	7. (7.)
(fuel bill)	18. (18.)	37. (37.)	55. (55.)
(electric bill)	0. (0.)	0. (0.)	0. (0.)
Total with no incentives	183. (255.)	203. (275.)	221. (292.)
Total with 20% ITC	166. (240.)	185. (259.)	203. (277.)
Total with full incentives	125. (189.)	144. (209.)	162. (227.)
b. Costs using conventional reference system	?10.	Id.?.	260.

C. EFFECTIVE COST OF ENERGY TO CONSUMER

(Conventional reference system is IF-7)

Levelized cost of solar energy or "conservation' energy[c]	Type of incentive given: No incentives	20% ITC	Full incentives
$/MMBtu primary fuel	8.72 [13.58]	7.51 [12.55]	4.77 (9 12)
¢/kWh electricity	10.26 [15.99]	8.84 [14.77]	562 (10.74)

Levelized price paid for conventional energy[b,c]	Escalation of conventional energy costs: Constant real energy prices	Energy price escalation I	Energy price escalation II
$/MMBtu primary fuel	3.37	4.97	7.79
e / k Wh electricity	396	584	9. ?7

Table IV-19.—Albuquerque: Solar Heat Engine Cogeneration System—Insulated Single Family House Using ORCS With Cooling Tower, One-Axis, Tracking Collector (Possible Future Design), Battery Electrical and High"Temperature Thermal Storage, Gas Backup; Building Equipped With IF-7 Space-Conditioning

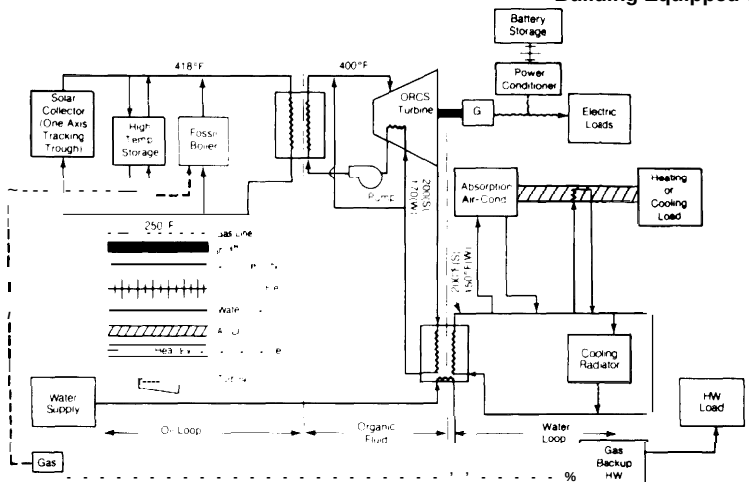

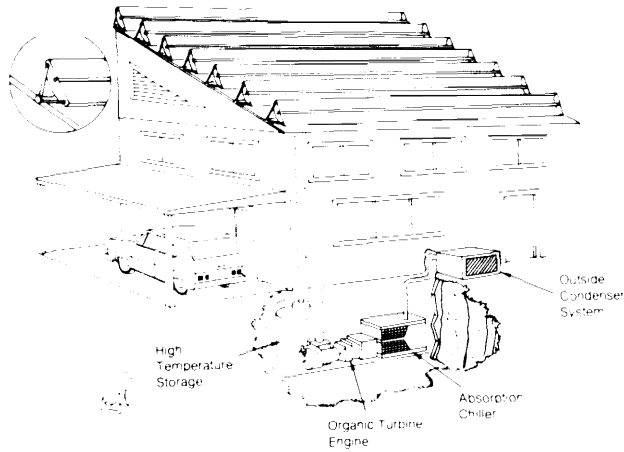

A. ITEMIZED COST OF COMPONENTS

Component	Size	Unit cost	First cost (incl. O&P)	Annual O & M	Life (yrs)
1. One axis E-W tracking collector	46 m²	129 $/m²	.$2,970	0	30
——Collector @ 80 $/m²			. 2.970	0	15
——installation @ 20 $/m²					
——Shipping @ 3 $/m²					
——Overhead and profit = 25%					
2. High temperature oil storage	100 kWh	17 $/kWh	1,700	0	30
3. Fossil boiler-cast iron	21.7 kW	47 $/kW	1,000	0	15
4. Absorption A/C	1.4 tons	850 $/ton	1,200	20	10
5. Water-to-air heat exchanger	9 kW	10 $/kW	90	0	15
6. Insulated steel pipe	125 ft.	4.1 $/ft.	513	0	30
7. Heat exchanger, pumps, and controls	—	—	500	0	10
8. Ductwork	—	—	425	0	30
9. Extra insulation, storm doors and windows	—	—	981	0	30
10. Organic turbine (installed with cooling tower, controls, and high temp. heat exchanger and generator.	4.3 kW	490 $/kW	2,110	30	15
11. Battery and space	10 kWh	78 $/kWh	780	6	10
12. Power conditioner	5 Kw	124 $/kW	580	6	30
TOTAL FOR BUILDING			$15,819	$62	
TOTAL PER UNIT			$15,819	$62	

. ' ainstalled collector cost assumed replaced in 15 yrs with total replacement in 30 yrs

ANNUAL ENERGY FLOWS (Conventional reference system is IF-7)

	Energy consumed by ref. system	Backup consumed w/ solar/conservation	Energy saved [%. of total)
Net Electricity (bought-sold] (MWh/unit)	7.8	0.	100,0
Fuel consumed onsite (MMBtu/unit)	169.	95.	43.9
Total energy requirement (bbl crude equiv.)[a]	54.	20.	63.7
Electricity sold to grid annually (MWh, entire building)			0.
Annual peak electricity demand (kW, entire building)			0.

B. LEVELIZED MONTHLY COSTS PER UNIT TO CONSUMER (Dollars)[b,c]

(Conventional reference system is IF-7)

	Escalation of conventional energy costs: Constant real energy prices		Energy price escalation I		Energy price escalation II	
1. 1976 Startup						
0. Costs using solar (conservation) system:						
Total with no incentives	207.	(287.)	221.	(301.)	234.	(314.)
Total with 20% ITC	187.	(270.)	201.	(284.)	214.	(297.)
Total with full incentives	141.	(212.)	155.	(226.)	168.	(239.)
b. Costs using conventional reference system	110.		145.		20d.	
2. 1985 Startup[d]						
a. Costs using solar [conservation) system:						
(capital related casts	177.	(257.)	177.	(257.]	177.	(257.)
(operation & maintenance costs)	9.	[9.)	9.	(9.)	9.	(9.)
(fuel bill)	21.	(21.)	42.	(42.)	62.	(62.)
(electric bill)	o.	(0.)	o.	(o.)	o.	(o.)
Total with no incentives	207.	(287.)	229.	(309.)	249.	(329.]
Total with 20% ITC	187.	(270.)	209.	(291.)	229.	(312.)
Total with full incentives	141.	(212.]	163.	[234.)	183.	(254.)
b. Costs using conventional reference system	110.		Id.?.		260.	

C. EFFECTIVE COST OF ENERGY TO CONSUMER

(Conventional reference system is IF-7)

Levelized cost of solar energy or 'conservation' energy[c]	Type of incentives given: No incentives	20% ITC	Full incentives
$/MMBtu primary fuel	10.83 (16.59)	9.37 (15.34)	6.04 (1 1.18)
¢/kWh electricity	12.75 (19.52)	11.02 [18.05)	7.11 [13,16)

Levelized price paid for conventional energy[b,e]	Escalation of conventional energy costs: Constant real energy prices	Energy price escalation I	Energy price escalation II
$/MMBtu primary fuel	3.37	4.97	7.79
¢/kWh electricity	3.96	5.84	9.17

Table IV-20.—Albuquerque: Conventional Heat Engine Cogeneration System— Insulated Single Family House Using Stirling Engine (Low Efficiency) Direct-Drive Heat Pump, Gas Hot Water; Building Equipped With IF-9 Space"Conditioning

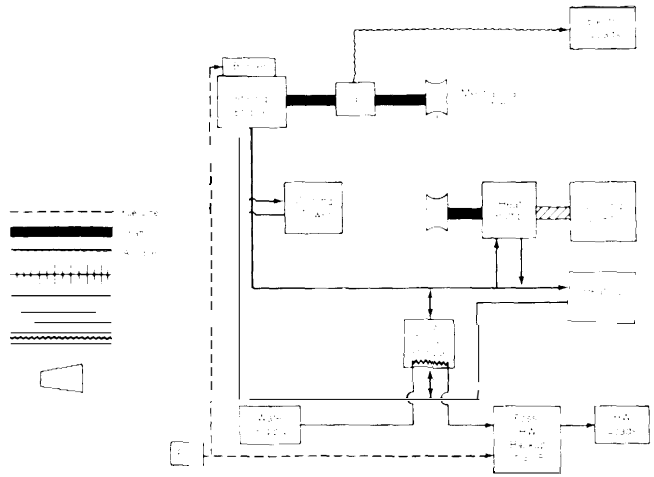

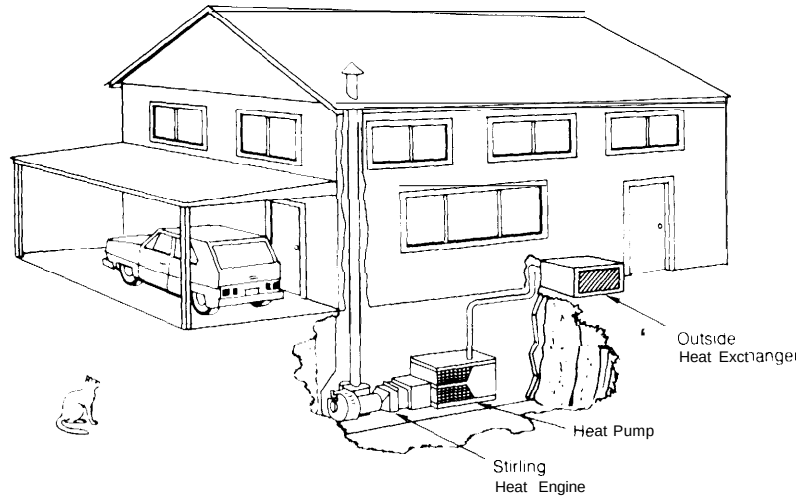

A. ITEMIZED COST OF COMPONENTS

	Component	Size	Unit cost	First cost (incl. O&P)	Annual O & M	Life (yrs)
1.	Heat Pump	1.30 tons	800 $/ton	$1,040	$50	10
2	Ductwork	—	—	425	0	30
3	Low temperature hot water storage	50 kWh	2 $/kW	100	o	30
4	Fossil water heater	40 gal	225 eo.	225	o	15
5.	Stirling engine (η = 0.32)	7.2 kW	188 $/kW	1,3s0	100	10
	——Engine (less generator) @ 150 $/kW					
	——Overhead and profit @ 25%					
6	Generator	5.5 kW	37 $/kW	204	0	10
7.	Heat exchanger	—	33$ ea.	33	0	30
8	Extra insulation, storm doors and windows	—	—	981	0	30
	TOTAL			$4,358	$150	

B. LEVELIZED MONTHLY COSTS PER UNIT TO CONSUMER (Dollars)[b,c]

(Conventional reference system is IF-7)

	Escalation of conventional energy costs					
	Constant real energy prices		Energy price escalation I		Energy price escalation II	
1. 1976 Startup						
a. Costs using solar (conservation) system:						
Total with no incentives	113.	(137.)	135.	(158.)	154.	(177.)
Total with 20% IT	111,	(136.)	133.	(157.)	152.	(176.)
Total with full incentives	107.	(130.)	128.	(151.)	147.	[171.)
b. Costs using conventional reference system	110.		145.		206	
2. 1985 Startup[d]						
a. Costs using solar (conservation) system:						
(capital related costs)	60.	[84.)	60.	[84.]	60.	(84.)
(operation & maintenance costs)	22.	(22.)	22.	(22.)	22.	(22.)
(fuel bill)	31.	(31.)	63.	(63.)	93.	[93.)
(electric bill)	o.	(0.)	o.	(0.)	o.	(o.)
Total with no incentives	113.	(137.)	146.	(170.)	176.	(200.]
Total with 20% ITC	111.	(136.)	144.	(168.)	174.	(198.)
Total with full incentives	107.	(130.)	140.	(163.)	170.	(193.)
b. Costs using conventional reference system	110.		163.		260.	

C. EFFECTIVE COST OF ENERGY TO CONSUMER

(Conventional reference system is IF-7)

Levelized cost of solar energy or 'conservation' energy[c]	Type of incentives given					
	No incentives		20% ITC		Full incentives	
$/MMBtu primary fuel	4.63	(7.04)	4.45	(6.88)	4.02	(6.34)
¢/kWh electricity	5.45	(8.28)	5.23	(8 09)	4.73	[7 46)

Levelized price paid for conventional energy[b,c]	Escalation of conventional energy costs		
	Constant real energy prices	Energy price escalation I	Energy price escalation II
$/MMBtu primary fowl	337	4.97	7.79
¢/kWh electricity	396	584	9.17

ANNUAL ENERGY FLOWS (Conventional reference system is IF-7)

	Energy consumed by ref. system	Backup consumed w/ solar/conservation	Energy saved (% of total)
Net Electricity (bought-sold) (MWh/unit)	7.8	0.	100.0
Fuel consumed onsite (MMBtu/unit)	169.	142.	16.1
Total energy requirement (bbl crude equiv.)[a]	54.	30.	45.6
Electricity sold to grid annually (MWh, entire building)			0.
Annual peak electricity demand (kW, entire building)			0.

Table IV-21.—Albuquerque: Conventional System—All Electric Single Family House Using Heat Pump Heating (SF-2)

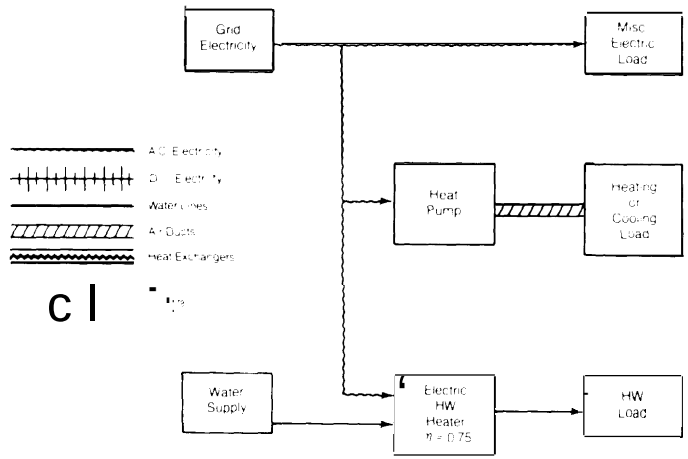

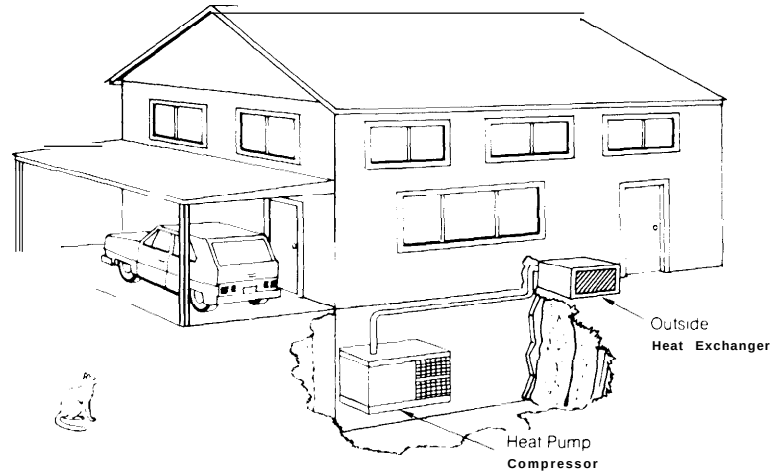

A. ITEMIZED COST OF COMPONENTS

Component	Size	Unit cost	First cost (incl. O&P)	Annual O&M	Life (yrs)
1. Heat pump	1.85 tons	800 $/ton	$1,480	$50	10
2. Ductwork	—	—	425	0	30
3. Electric water heater	40 gal	225 ea.	225	0	15
TOTAL			$2,130	$50	

B. LEVELIZED MONTHLY COSTS PER UNIT TO CONSUMER (Dollars)[b,c]

[Conventional reference system is SF-2)

	Escalation of conventional energy costs					
	Constant real energy prices		Energy price escalation I		Energy price escalation II	
1. 1976 Startup						
Total with no incentive!	156.	(169.)	186.	[199.)	310.	[322.)
Total with 20% IT	156.	(169.)	186.	(199.)	310.	[322.)
Total with full incentives	156.	(169.)	186.	(199.)	310.	(322.)
2. 1985 Startup[d]						
(capital related costs)	32.	(44.)	32.	(44.)	32.	(44.]
(operation & maintenance costs)	7.	(7.)	7.	(7.)	7	(7.)
(fuel bill)	0.	(o.)	o.	(o.)	o.	(0.)
(electric bill)	117.	(117.)	164.	(164.)	355.	(355.)
Total with no incentives	156.	(169.)	203.	(216.)	395.	(407.)
Total with 20% IT	156.	(169.)	203.	(216.)	395.	(407.)
Total with full incentives	156.	(169.)	203.	[216.)	395.	(407.]

ANNUAL ENERGY FLOWS (Conventional reference system is SF-2)

	Energy consumed by ref. system	Backup consumed w/ solar/conservation	Energy saved (%. of total)
Net Electricity (bought-sold) (MWh/unit)	32.5	32.5	0.
Fuel consumed onsite (MMBtu/unit)	o.	0.	0.
Total energy requirement (bbl crude equiv.)[a]	79.	79.	0.
Electricity sold to grid annually (MWh, entire bumming)			0.
Annual peak electricity demand (kW, entire building)			25.6

C. EFFECTIVE COST OF ENERGY TO CONSUMER

(Conventional reference system is SF-2)

	Type of incentives given					
Levelized cost of solar energy or 'conservation' energy[c]	No incentives		20% ITC		Full incentives	
$/MMBtu primary fuel	N/A	(N/A)	N/A	(N/A)	N/A	[N/A)
¢/kWh electricity	N/A	(N/A)	N/A	(N/A)	N/A	[N/A)

	Escalation of conventional energy costs		
Levelized price paid for conventional energy[b,e]	Constant real energy prices	Energy price escalation I	Energy price escalation II
$/MMBtu primary fuel	*3.66*	*4.61*	*8.47*
¢/kWh electricity	*4.31*	*5.42*	*9.97*

Table IV.22.—Albuquerque: Conventional System –All Electric Single Family House Using Improved Heat Pump Heating (High Price) (SF-2)

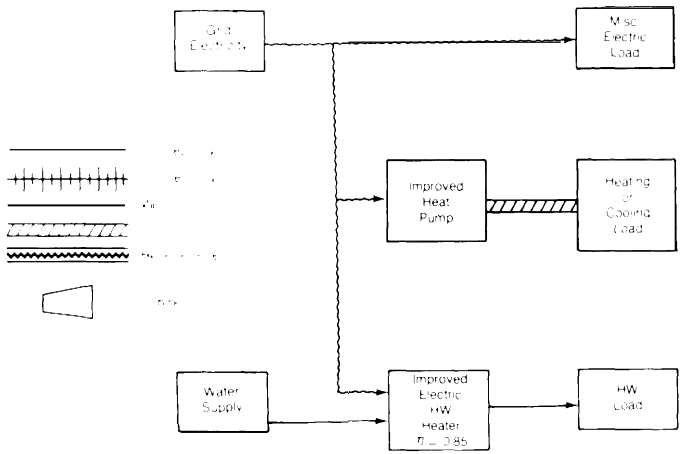

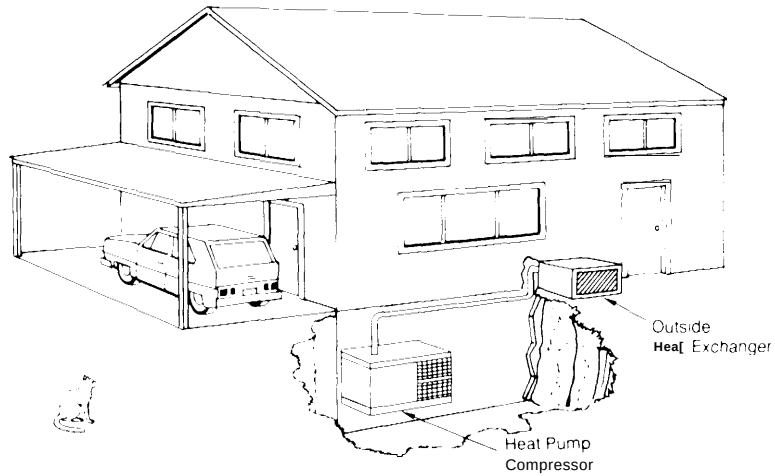

A. ITEMIZED COST OF COMPONENTS

Component	Size	Unit cost	First cost (incl. O&P)	Annual O & M	Life (yrs)
1. Heat pump	1.85 tons	1,440 $/ton	$2,660	$50	10
2. Ductwork	—	—	425	0	30
3. Electric water heater	40 gal	225 ea.	225	0	15
TOTAL			$3,310	$50	

B. LEVELIZED MONTHLY COSTS PER UNIT TO CONSUMER (Dollars)[b,c]

[Conventional reference system is SF-2)

	Escalation of conventional energy costs		
	Constant real energy prices	Energy price escalation I	Energy price escalation II
1. 1976 Startup			
a. Costs using solar (conservation) system:			
Total with no incentives	162. (181.)	188. (208.)	295. [315.)
Total with 20% IT	160. (180.]	186. [206.]	293. (313.)
Toted with full incentives	155. (174.)	182. (201.]	289. (308.)
b Costs using conventional reference system	?s6.	186.	3?0.
2. 1985 Startup[d]			
0. Costs using solar (conservation) system:			
(capital related coats	53. (73.)	53. (73.)	53. [73.)
(operation & maintenance costs)	7. (7.)	7. (7.)	7. (7.)
(fuel bill)	0. (0.)	0. (0.)	0. (0.)
(electric bill)	101. (101.)	142. [142.)	309. (309.)
Total with no incentives	162. [181.)	203. (222.)	369. (389.)
Total with 20% IT	160. [180.)	201. (221.)	367. (387.)
Total with full incentives	155. [174.)	196. (215.)	363. (382.)
b Costs using conventional reference system	156.	203.	395.

C. EFFECTIVE COST OF ENERGY TO CONSUMER

(Conventional reference system is SF-2)

	Type of incentives given		
Levelized cost of solar energy or 'conservation' energy[c]	No incentives	20% ITC	Full incentives
$/MMBtu primary fuel	4.48 (8.77)	4.06 (8.42)	3.13 (7.25)
¢/kWh electricity	5.27 (10.32)	478 (9 91]	369 (8.54]

	Escalation of conventional energy costs		
Levelized price paid for conventional energy[b,e]	Constant real energy prices	Energy price escalation I	Energy price escalation II
$/MMBtu primary fuel	366	4.61	847
¢/kWh electricity	431	542	997

ANNUAL ENERGY FLOWS (Conventional reference system is SF-21

	Energy consumed by ref. system	Backup consumed w/ solar/conservation	Energy saved (% of total)
Net Electricity (bought-sold) (MWh/unit)	32.5	27.8	14.5
Fuel consumed onsite (MMBtu/unit)	o.	0.	0.
Total energy requirement (bbl crude equiv.)[a]	79.	68.	14.5
Electricity sold to grid annually (MWh, entire building)			0.
Annual peak electricity demand (kW, entire building)			25.6

Table IV-23.—Albuquerque: Conventional System—All Electric Single Family House Using Improved Heat Pump Heating (Low Price) (SF-2)

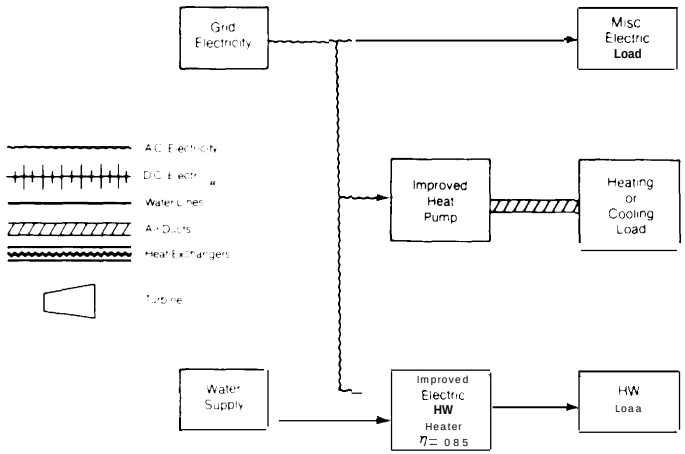

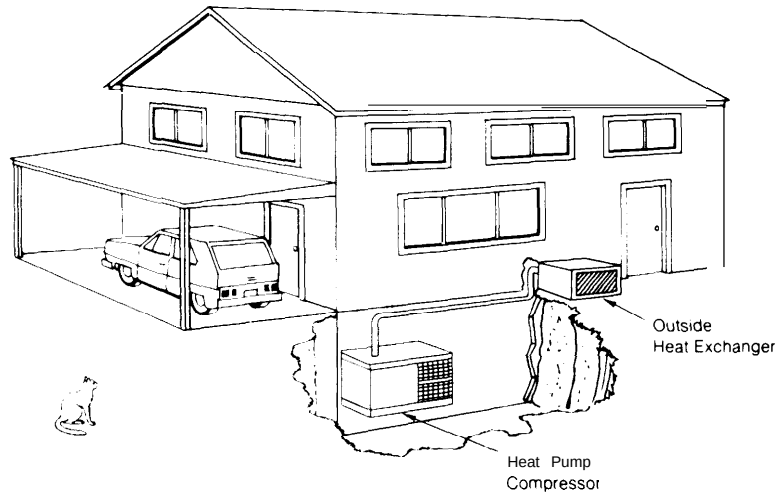

A. ITEMIZED COST OF COMPONENTS

Component	Size	Unit cost	First cost (incl. O&P)	Annual O & M	Life (yrs)
1. Heat pump	1.85 tons	960 $/ton	$1,780	$50	10
2. Ductwork	—	—	425	0	30
3. Electric water heater	40 gal	225 ea.	225	0	15
TOTAL			$2,430	$50	

B. LEVELIZED MONTHLY COSTS PER UNIT TO CONSUMER (Dollars)[b,c]

(Conventional reference system is SF-2)

	Escalation of conventional energy costs		
	Constant real energy prices	Energy price escalation I	Energy price escalation II
1. 1976 Startup			
0. Costs using solar (conservation) system:			
Total with no incentives	147. (lbO.)	173. (187.)	280. (294.)
Total with 20% ITC	146. (160.)	172. (186.)	279. (293.)
Total with full incentives	145. (159.)	172. (185.)	279. (292.)
b. Costs using conventional reference system	157.	187.	310.
2. 1985 Startup[d]			
a. Costs using solar (conservation) system:			
(capital related costs)	38. (52.)	38. (52.)	38. (52.)
(operation & maintenance costs)	7. (7.)	7. (7.)	7. (7.)
(fuel bill)	0. (0.)	0. (0.)	0. (0.)
(electric bill)	101. (101.)	142. (142.)	309. (309.)
Total with no incentives	147. (16.0.)	187. (201.)	354. (368.)
Total with 20% ITC	146. (160.)	187. (201.)	353. (367.)
Total with full incentives	145. (159.)	186. (200.)	353. (366.)
b. Costs using conventional reference system	157.	204.	395.

C. EFFECTIVE COST OF ENERGY TO CONSUMER

[Conventional reference system is SF-2)

Levelized cost of solar energy or 'conservation' energy[c]	Type of incentives given: No incentives	20% ITC	Full incentives
$/MMBtu primary fuel	1.15 (4.16)	1.04 (4.07)	.90 (3.78]
¢/kWh electricity	1.35 (4.90)	1.23 (4.s0)	1.06 [4.45)

Levelized price paid for conventional energy[b,e]	Escalation of conventional energy costs: Constant real energy prices	Energy price escalation I	Energy price escalation II
$/MMBtu primary fuel	3.66	4.61	8.47
¢/kWh electricity	4.31	5.42	9.97

ANNUAL ENERGY FLOWS

(Conventional reference system is SF-2)

	Energy consumed by ref. system	Backup consumed w/ solar/conservation	Energy saved (% of total)
Net Electricity (bought-told) (MWh/unit)	32.5	27.8	14.5
Fuel consumed onsite (MMBtu/unit)	o.	0.	0.
Total energy requirement (bbl crude equiv.)[a]	79.	68.	14.5
Electricity sold to grid annually (MWh, entire building)			0.
Annual peak electricity demand (kW, entire building)			25.6

Table IV-24 .—Albuquerque: Solar Hot Water System—Single Family House Using Flat-Plate Collectors (1977 Prices); Building Equipped With SF-2 Space-Conditioning

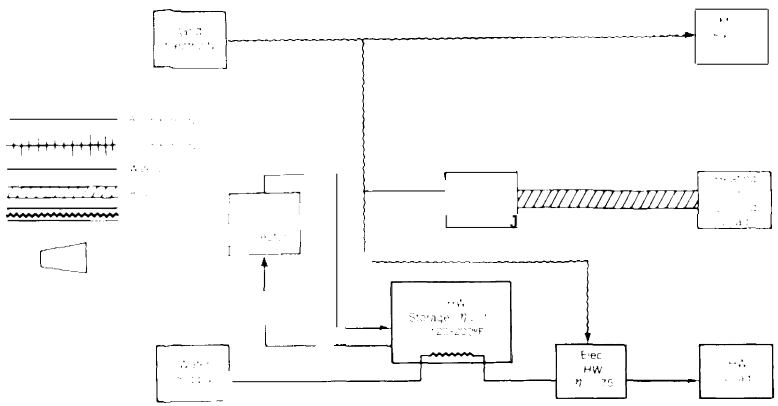

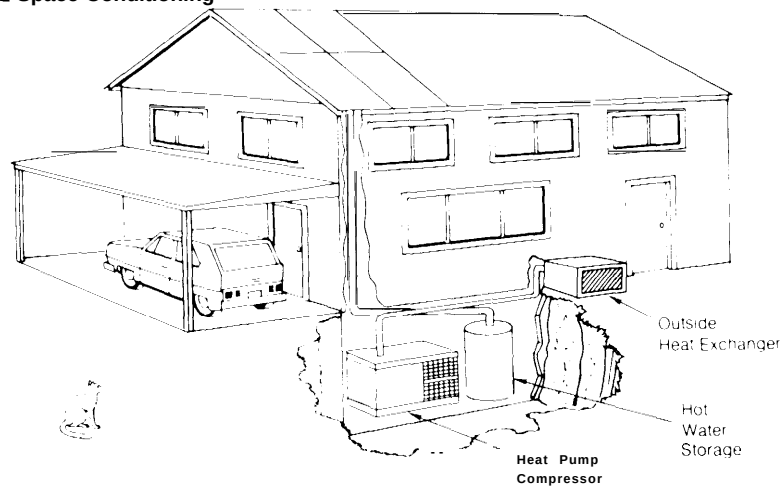

A. ITEMIZED COST OF COMPONENTS

Component	Size	Unit cost	First cost (incl. O&P)	Annual O&M	Life (yrs)
1 Heat pump	1.85 tons	800 $/tons	$1,480	50	10
2 Ducting	—	—	425	0	30
3 Hot water storage with electric backup (including heat exchanger).	100 gal	$355	355	0	30
4 Pumps and controls	—	$250	250	0	10
5 Insulated steel pipe	75 ft	$2.6/ft	195	0	30
6 Flat plate solar collectors	10 m²	143 $/m²	● 715	0	15
—Collector cost @ 95 $/m*			● 715	0	30
—Installation @ 16 $/m²					
—Transportation @ $3/m²					
—Overhead and profit= 25%					
TOTAL			$4,135	$50	

● ½ installed collector cost assumed replaced in 15 yrs., with total replacement in 30 yrs.

ANNUAL ENERGY FLOWS

(Conventional reference system is SF-2)

	Energy consumed by ref. system	Backup consumed w/ solar/conservation	Energy saved (% of total)
Net Electricity (bought-sold) (MWh/unit)	32.5	23.3	28.4
Fuel consumed onsite (MMBtu/unit)	0.	0.	0.
Total energy requirement (bbl crude equiv.)[a]	79.	57.	28.4
Electricity sold to grid annually (MWh, entire building)			0.
Annual peak electricity demand (kW, entire building)			27.3

B. LEVELIZED MONTHLY COSTS PER UNIT TO CONSUMER (Dollars)[b,c]

(Conventional reference system is SF-2)

	Escalation of conventional energy costs: Constant real energy prices		Energy price escalation I		Energy price escalation II	
1. 1976 Startup						
a. Costs using solar (conservation) system:						
Total with no incentives	147.	(169.)	170.	(191.)	261.	(283.)
Total with 20% IT	144.	(166.)	167.	(188.)	258.	(280.)
Total with full incentives	140.	(157.)	162.	(179.)	254.	(271.)
b. Costs using conventional reference system	157.		187.		310.	
2. 1985 Startup*						
0. Costs using solar (conservation) system:						
(capital related costs)	53.	(74.)	53.	(74.)	53.	(74.)
(operation & maintenance costs)	7.	(7.)	7.	(7.)	7.	(7.)
(fuel bill)	0.	(0.)	0.	(0.)	0.	(0.)
(electric bill)	87.	(87.)	122.	(122.)	264.	(264.)
Total with no incentives	147.	(169.)	182.	(204.)	325.	(346.)
Total with 20% IT	144.	(166.)	179.	(201.)	322.	(343.)
Total with full incentives	140.	(157.)	175.	(192.)	317.	(334.)
b. Costs using conventional reference system	157.		204.		39.5.	

C. EFFECTIVE COST OF ENERGY TO CONSUMER

[Conventional reference system is SF-2)

Levelized cost of solar energy or conservation energy	Type of incentive given: No incentives		20% ITC		Full incentive!	
$/MMBtu primary fuel	2.30	(4.65)	1.94	(4.34)	1.47	(3 33)
¢/kWh electricity	2.70	(5.471	2.28	[5.1 1)	1,73	(3.92)

Levelized price paid for conventional energy[b,c]	Escalation of conventional energy costs: Constant real energy prices	Energy price escalation I	Energy price escalation II
$/MMBtu primary fuel	3.66	461	8.47
¢/kWh electricity	4.31	5.42	9.97

Table IV-25.—Albuquerque: Solar Hot Water and Heating System—Single family House Using Flat-Plate Collectors (1977 Prices), Low-Temperature Thermal Storage; Building Equipped With SF-2 Space-Conditioning

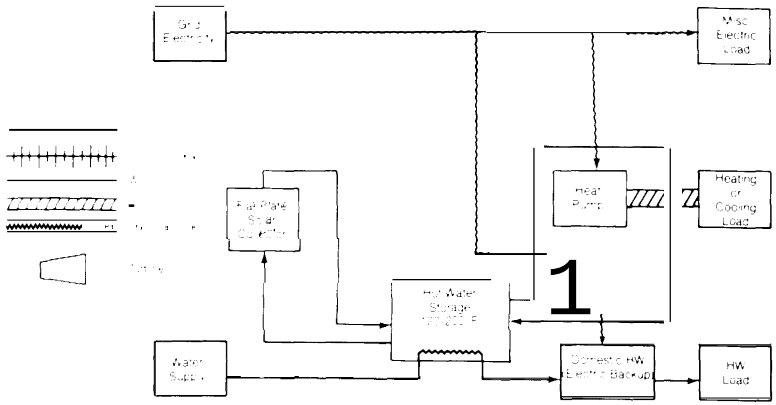

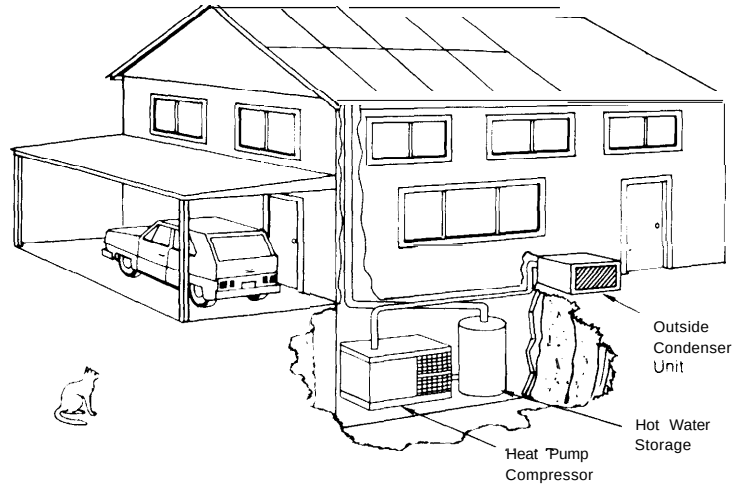

A. ITEMIZED COST OF COMPONENTS

Component	Size	Unit cost	First cost (incl. O&P)	Annual O&M	Life (yrs)
1. Heat pump	1.85 tons	800 $/ton	$1,480	$50	10
2. Ductwork	—	—	425	0	30
3. Collectors and associated costs	25 m'	143 $/m²	•1,787	o	15
——Collectors @ 95 $/m'			● 1,787	o	30
——Installation @ 16 $/m'					
——Transportation @ 3 $/m'					
—25% overhead and profit	—	—	—	—	—
4. ¾" insulated steel pipe	125 ft	$4.1	513	0	30
5. Storage (without plumbing)	200 kWh	$2.05/kWh	410	0	30
6. Pump, controls, and heat exchanger	—	$650	650	0	10
TOTAL			$7,052	$50	

•?4 installed collector cost assumed replaced in 15 yrs., with total replacement in 30 yrs.

ANNUAL ENERGY FLOWS

(Conventional reference system is SF-21

	Energy consumed by ref. system	Backup consumed w/ solar/conservation	Energy saved (% of total]
Net Electricity (bought-sold) (MWh/unit)	32.5	20.5	37.0
Fuel consumed onsite(MMBtu/unit)	0.	0.	0.
Total energy requirement (bbl crude equiv.)[a]	79.	50.	37.0
Electricity sold to grid annually (MWh, entire building)			o.
Annual peak electricity demand (kW, entire building)			25.6

B. LEVELIZED MONTHLY COSTS PER UNIT TO CONSUMER (Dollars)[b,c]

(Conventional reference system is SF-2)

	Escalation of conventional energy costs		
	Constant real energy prices	Energy price escalation I	Energy price escalation II
1. 1976 Startup			
0. Costs using solar (conservation) system:			
Total with no incentives	171. [206.)	191. (226.)	273. (388.)
Total with 20% ITC	163. (199.)	183. (219.)	265. (301.)
Total with full incentives	152. (177.)	172. (197.)	254. (279.)
b. Costs using conventional reference system	157.	187.	310.
2. 1985 Startup[d]			
0. Costs using solar (conservation) system:			
(capitol related costs)	85. (121.)	85. (121.]	85. (121.)
(operation & maintenance costs)	7. (7.)	7. (7.)	7. (7.)
(fuel bill)	0. (0.)	o. (o.)	o. (o.)
(electric bill)	78. [78.)	109. (109.)	237. [237.)
Total with no incentives	171. (206.)	202. (237.)	329. (365.)
Total with 20% ITC	163. (199.)	194. (230.)	321. (358.)
Total with full incentives	152. (177.)	184. (208.)	311. (335.)
b. Costs using conventional reference system..	157.	204.	395.

C. EFFECTIVE COST OF ENERGY TO CONSUMER

[Conventional reference system is SF-2)

Levelized cost of solar energy or 'conservation' energy[c]	Type of incentives given		
	No incentive	20% ITC	Full incentives
$/MMBtu primary fuel	4.49 (7.48)	3.82 (6.91)	2.94 [5.01)
¢/kWh electricity	5.29 (8.81)	4.50 (8.13)	3.46 (5.89)

Levelized price paid for conventional energy[b,e]	Escalation of conventional energy costs		
	Constant real energy prices	Energy price escalation I	Energy price escalation II
$/MMBtu primary hi	3.66	4.61	8.47
¢/kWh electricity	4.31	5.42	9.97

Table IV-26.—Albuquerque: Solar Hot Water and Heating System—Single Family House Using Flat-Plate Collectors (1977 Prices); Building Equipped With SF-2 Space-Conditioning

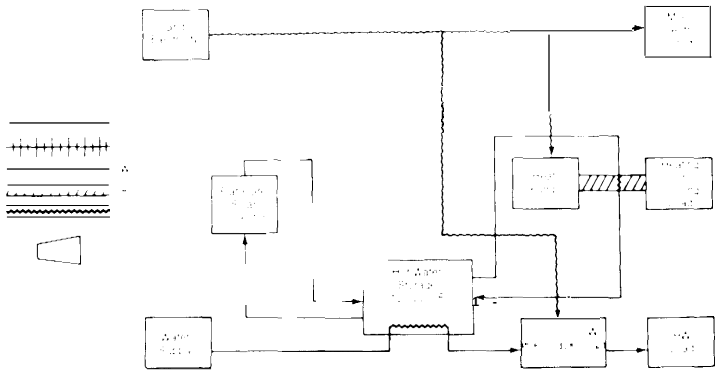

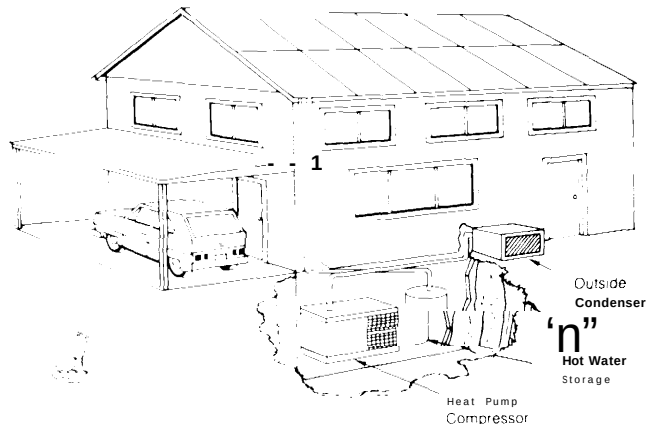

A. ITEMIZED COST OF COMPONENTS

Component	Size	Unit cost	First cost (incl. O&P)	Annual O & M	Life (yrs)
1 Heat pump	1.85 tons	800 $/ton	$1,480	$50	10
2 Ductwork	—	—	425	0	30
3 Collectors and associated costs	30 m'	143 $/m²	*2.145	0	30
——Collector! @ 95 $/m'			" 2 145	0	15
——Installation @ 16 $/m'					
——Transportation @ 3 $/m'					
——25% overhead and profit					
4. 1. insulated steel pipe	125 ft	4.1 $/ft	513	0	30
5 Storage (without plumbing)	200 kWh	205 $/kWh	410	0	30
6 Pumps, controls, and heat exchanger	—	650	650	0	10
TOTAL FOR BUILDING			$7,768	$50	
TOTAL PER UNIT			$7,768	$50	

* ½ installed collector cost assumed replaced in 15 yrs with total replacement in 30 yrs

ANNUAL ENERGY FLOWS

(Conventional *reference* system is SF-2)

	Energy consumed by ref. system	Backup consumed w/ solar/conservation	Energy saved (% of total)
Net Electricity (bought-sold) (MWh/unit)	32.5	19.0	41.4
Fuel consumed onsite (MMBtu/unit)	0.	0.	0.
Total energy requirement (bbl crude equiv.)[a]	79.	47.	41.4
Electricity sold to grid annually (MWh, entire building)			0.
Annual peak electricity demand (kW, entire building)			25.6

B. LEVELIZED MONTHLY COSTS PER UNIT TO CONSUMER (Dollars)[bc]

(Conventional reference system is SF-2)

	Escalation of conventional energy costs: Constant real energy prices		Energy price escalation I		Energy price escalation II	
1. 1976 Startup						
a. Costs using solar (conservation) system:						
Total with no incentives	172.	(212.)	191.	(231.)	268.	(308.)
Total with 20% IT	163.	(204.)	182.	(223.)	259.	(300.)
Total with full incentives	143.	(179.]	162.	(197.)	239.	(275.)
b. Costs using conventional reference system	156.		186.		310.	
2. 1985 Startup[c]						
0. Costs using solar (conservation) system:						
(capital related costs)	92.	(132.)	92.	(132.)	92.	(132.)
(operation & maintenance costs)	7.	(7.)	7.	[7.)	7.	(7.)
(fuel bill)	o.	[0.)	o.	(o.)	o.	[0.)
[electric bill)	73.	[73.)	103.	(103.)	222.	(222.)
Total with no incentives	172.	(212.)	202.	(241.)	322.	(361.)
Total with 20% ITC	163.	[204.)	193.	(234.)	313.	(354.)
Total with full incentives	143.	(179.)	172.	(208.)	292.	(328.)
b. Costs using conventional reference system	156.		203.		395.	

C. EFFECTIVE COST OF ENERGY TO CONSUMER

(Conventional reference system is SF-2)

Levelized cost of solar energy or 'conservation' energy[c]	Type of incentives given: No incentives		20% ITC		Full incentives	
$/MMBtu primary fuel	4.52	(7.53)	3.83	(6.94)	2.27	(4 99)
¢/kWh electricity	5.32	(8.86)	4.51	(8.17)	268	[5.88)

Levelized price paid for conventional energy[b]	Escalation of conventional energy costs: Constant real energy prices	Energy price escalation I	Energy price escalation II
$/MMBtu primary fuel	366	461	847
¢/kWh electricity	431	542	9.97

Table IV-27.—Albuquerque: Solar Hot Water and Heating System—Single Family House Using Flat"Plate Collectors (1977 Prices), Low-Temperature Thermal Storage; Building Equipped With SF-2 Space-Conditioning

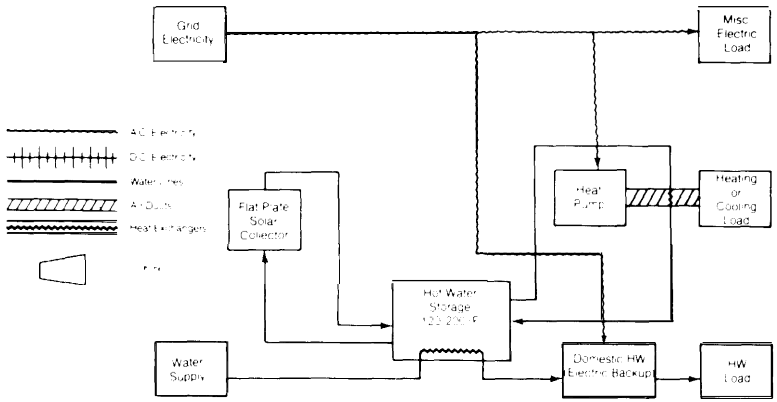

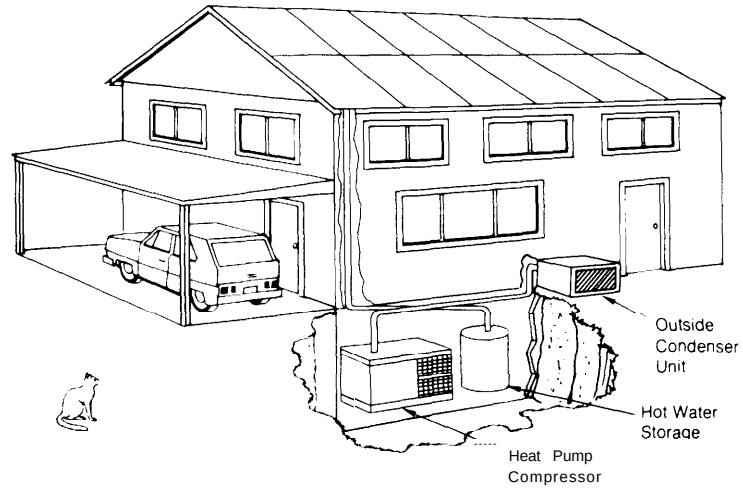

A. ITEMIZED COST OF COMPONENTS

Component	Size	Unit cost	First cost (incl. O&P)	Annual O&M	Life (yrs)
1. Heat pump	1.85 toni-	800 $/ton	$1,480	$50	10
2. Ductwork	—	—	425	0	30
3. Collectors and associated costs	45 m²	143 $/m*	3,217	0	15
——Collector @ 95 $/m*			3,217	o	30
——Installation @ 16 $/m²					
——Transportation @ 3 $/m²					
——25% overhead and profit					
4. Insulated steel pipe	125 ft	$4.1	513	0	30
5. Storage (without plumbing)	200 kWh	$2.05/kWh	410	0	30
6. Pump, controls, and heat exchanger	—	$650	650	0	10
TOTAL			$9,912	$50	

*½ installed collector cost assumed replaced in 15 yrs., with total replacement in 30 yrs

ANNUAL ENERGY FLOWS

(Conventional reference system is SF-2)

	Energy consumed by ref. system	Backup consumed w/ solar/conservation	Energy saved (% of total)
Net Electricity (bought-sold) (MWh/unit)	32.5	16.8	48.4
Fuel consumed onsite (MMBtu/unit)	o.	0.	0.
Total energy requirement (bbl crude equiv.)[a]	79.	41.	48.4
Electricity sold to grid annually (MWh, entire building)			0.
Annual peak electricity demand (kW, entire building)			25.6

B. LEVELIZED MONTHLY COSTS PER UNIT TO CONSUMER (Dollars)[b,c]

(Conventional reference system is SF-2)

	Escalation of conventional energy costs: Constant real energy prices	Energy price escalation I	Energy price escalation II
1. 1976 Startup			
a. Costs using solar (conservation) system			
Total with no incentives	188. (237.)	205. (254.)	274. (323.)
Total with 20% ITC	176. (226.)	193. (243.)	262. (313.)
Total with full incentives	159. (191.)	176. (208.)	245. (277.)
b. Costs using conventional reference system	157.	187.	310.
2. 1985 Startup[d]			
0. Costs using solar (conservation) system:			
(capitol related costs)	115. (164.)	115. (164.)	115. (164.)
[operation & maintenance costs)	7. [7.)	7. (7.)	7. (7.)
(fuel bill)	0. (o.)	o. (0.)	o. (0.)
(electric bill)	66. [66.)	92. (92.)	200. (200.)
Total with no incentives	188. (237.)	215. (263.)	322. (371.)
Total with 20% ITC	176. (226.)	202. [253.)	310. (361.)
Total with full incentives	159. (191.)	186. (217.)	293. [325.)
b. Costs using conventional reference system	157.	204.	395.

C. EFFECTIVE COST OF ENERGY TO CONSUMER

(Conventional reference system is SF-2)

Levelized cost of solar energy or 'conservation' energy[c]	Type of incentives given: No incentives	20% ITC	Full incentives
$/MMBtu primary fad	5.35 (8.52)	4.54 (7.82)	3.48 (5.52)
¢/kWhelectricity	6.30 (10.02)	5.35 (9.21)	4.09 (6. XI)

Levelized price paid for conventional energy[b,e]	Escalation of conventional energy costs: Constant real energy prices	Energy price escalation I	Energy price escobtion H
$/MMBtu primary tail	3.66	4.61	8.47
¢/kWhelectricity	4.31	5.42	9.97

Table IV-28.—A[buquerque: 100-percent" Solar Hot Water and Heating System— Single Family House Using Flat. Plate Collectors 1977 Prices), Community Seasonal Low. Temperature Thermal Storage; Building Equipped With SF-2 Space-Conditioning

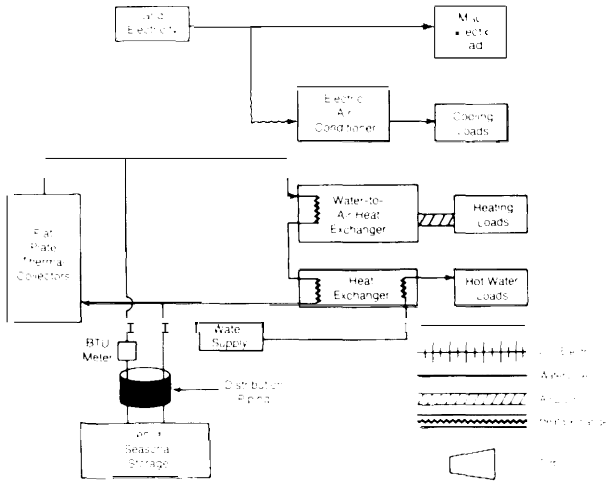

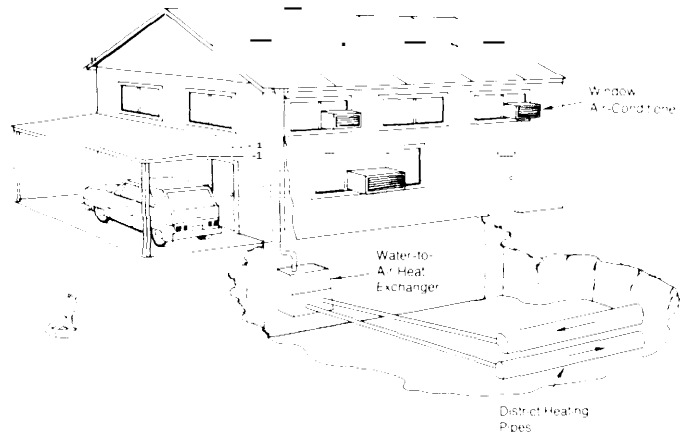

A. ITEMIZED COST OF COMPONENTS

Component	Size	Unit cost	First cost (incl. O&P)	Annual O & M	Life (yrs.)
1. Fan coil unit	13.2 kW	13 $/kW	$170	0	15
2. Ductwork	—	—	425	0	30
3. Central electric a/c.	1.85 tons	430 $/ton	796	$30	10
4. Hot water tank w/heat exchange	30 gal	225$	225	0	15
5. Collector and associated costs	35m²	143 $/m'	' 2500	0	15
——Collectors @95 $/m'			' 2500	0	30
—-- Installation @ 16 $/m²					
——Transportation @ 3 $/mm²					
——25% overhead and profit					
6. Controls			100	0	15
7. 1. insulated steel pipe	100 ft	$4.1/ft	410	0	30
8. Storage	13,000 kWh	0.5 $/kWh	6,000	0	30
9 Distribution system [including BTU meter)	—	—	3,000	90	30
TOTAL FOR BUILDING			$16,126	$120	
TOTAL PER UNIT			$16,126	$120	

*½ installed collector cost assumed replaced in 15 yrs with total replacement in 30 yrs

B. LEVELIZED MONTHLY COSTS PER UNIT TO CONSUMER (Dollars)[b,c]

(Conventional reference systemis SF-2)

	Escalation of conventional energy costs		
	Constant reel energy prices	Energy price escalation I	Energy price escalation II
1. 1976 Startup			
a. Costs using solar (conservation) system:			
Total with no incentives	216. (286.)	229. [298.)	279. (349.)
Total with 20% IT	194. (267.)	206. (279.)	257. [329.)
Total with full incentives	164. (203.)	177. (215.)	227. (266.)
b. Costs using conventional reference system	157.	187.	310.
2. 1985 Startup[d]			
a. Costs using solar (conservation) system:			
(capital related costs)	151. (220.)	151. (220.)	151. (220.)
(operation & maintenance costs)	18. (18.)	18. (18.)	18. (18.)
(fuel bill)	o. (0.)	0. [0.)	o. (o.)
(electric bill)	48. (48.]	67. (67.)	146. (146.)
Total with no incentives	216. (286.)	236. [305.)	314. [384.)
Total with 20% IT	194. (267.)	213. (286.)	292. (364.)
Total with full incentives	164. [203.)	184. (222.)	262. (301.)
b. Costs using conventional reference system	157.	204.	395.

C. EFFECTIVE COST OF ENERGY TO CONSUMER

(Conventional reference system is SF-2)

	Type of incentives given		
Levelized cost of solar energy or 'conservation' energy[c]	No incentives	20% ITC	Full incentives
$/MMBtu primary fuel	6.18 [9.51)	5.10 (8.59)	3.68 (5.52)
¢/kWh electricity	7.27 (1 1.19)	6.00 (10.10)	4.33 (6.49)
	Escalation of conventional energy costs		
Levelized price paid for conventional energy[b,e]	Constant real energy prices	Energy price escalation I	Energy price escalation II
$/MMBtu primary fuel	3.66	4.61	8.47
¢/kWh Aced+-..	4.31	5.42	9.97

ANNUAL ENERGY FLOWS

(Conventional reference system is SF-2)

	Energy consumed by ref. system	Backup consumed w/ solar/conservation	Energy saved (% of total)
Net Electricity (bought, sold) (MWh/unit)	32.5	11.3	65.4
Fuel consumed onsite (MMBtu/unit)	o.	0.	0.
Total energy requirement (bbl crude equiv.)[a]	79.	28.	65.4
Electricity sold to grid annually (MWh, entire building)			0.
Annual peak electricity demand (kW, entire building)			5.2

Table IV-29.—Albuquerque: 100-Percent Solar Hot Water and Heating System—Single Family House Using Flat"Plate Collectors (Possible Future Price), Community Seasonal Storage; Building Equipped With SF-2 Space-Conditioning

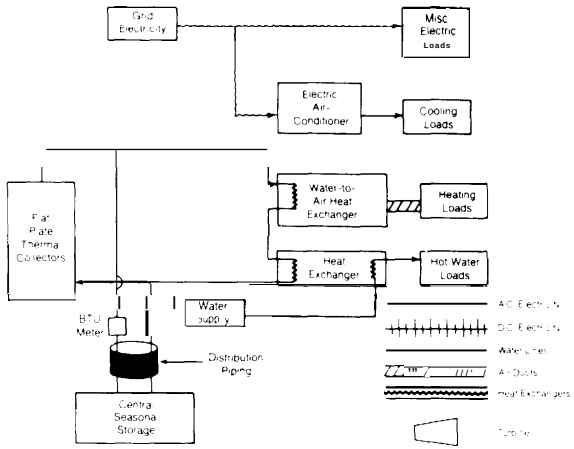

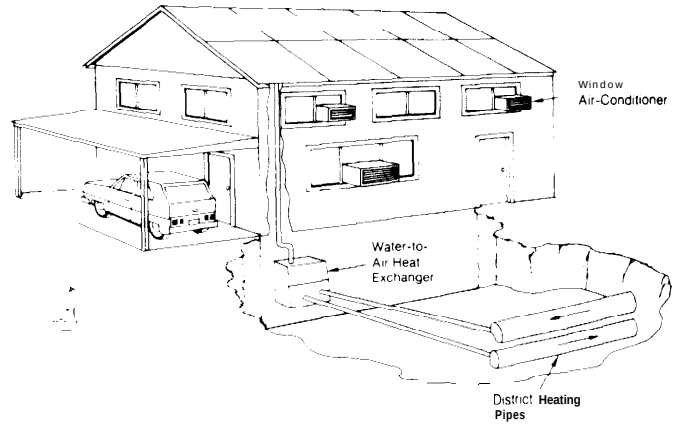

A. ITEMIZED COST OF COMPONENTS

Component	Size	Unit cost	First cost (incl. O&P)	Annual O&M	Life (yrs)
1. Fan coil unit	13.2 kW	13 $/kW	$170	0	15
2. Ductwork	—	—	425	0	30
3. Control electric o/c	1.85 tons	430 $/ton	796	$30	10
4. Hot water tank w/heat exch.	30 gal	225 $/ton	225	0	15
5. Collectors and associated costs	40 m²	86 $/m²	1 720	0	15
—Collectors @ 50 $/m²			1 720	0	30
—Installation @16 $/m²					
—Transportation @3 $/m²					
—25% overhead and profit					
6. Controls	—	—	100	0	15
7. 1" insulated steel pipd	100 ft	$4.1/ft	410	0	30
8. Storage (aquifer part)	17,000 kWh	0.1 $/kW	1,700	0	30
9. Distribution piping	—	—	3,000	90	30
TOTAL FOR BUILDING			$10,266	$120	
TOTAL PER UNIT			$10,266	$120	

[a] ½ installed collector cost assumed replaced in 15 yrs with total replacement in 30 yrs

B. LEVELIZED MONTHLY COSTS PER UNIT TO CONSUMER (Dollars)[b,c]

(Conventional reference system is SF-2)

	Escalation of conventional energy costs		
	Constant real energy prices	Energy price escalation I	Energy price escalation II
1. 1976 Startup			
a. Costs using solar (conservation) system:			
Total with no incentives	166. (21 1.)	178. (224.)	229. (274.)
Total with 20% it	153. (200.)	165. [212.)	216. (263.)
Total with full incentives	136. (163.)	148. (175.)	199. [226.)
b. Costs using conventional reference system	157.	187.	310.
2. 1985 Startup[d]			
a. Casts using solar (conservation) system:			
(capital related costs)	100. (146.)	100. (146.)	100. (146.)
(operation & maintenance costs)	18. [18.)	18. (18.)	18. [18.)
(fuel bill)	o. (o.)	o. [0.]	o. (0.)
(electric bill)	48. [48.)	67. (67.)	146. [146.)
Total with no incentives	166. (21 1.)	185. (231.)	264. (309.)
Total with 20% IT	153. (200.)	172. (219.)	251. (298.)
Total with full incentives	136. (163.)	155. (182.)	233. [261 .)
b. Costs using conventional reference system	157.	204.	3 9 5 .

C. EFFECTIVE COST OF ENERGY TO CONSUMER

(Conventional reference system is SF-2)

Levelized cost of solar energy or 'conservation' energy[c]	Type of incentives given		
	No incentives	20% ITC	Full incentives
$/MMBtu primary fad	3.75 (5.931	3.13 (5.39)	2.30 (3.61)
¢/kWh electricity	4.42 (6.98)	3.68 (6.35)	2.71 (4.25)

Levelized price poid for conventional energy[b,e]	Escalation of conventional energy costs		
	Constant real energy prices	Energy price escalation I	Energy price escalation II
$/MMBtu primary fuel	3.66	4.61	8.47
¢/kWh electricity	4.31	5.42	9.97

ANNUAL ENERGY FLOWS

(Conventional reference system is SF-2)

	Energy consumed by ref. system	Backup consumed w/ solar/conservation	Energy saved (% of total)
Net Electricity (bought-sold) (MWh/unit)	32.5	11.3	65.4
Fuel consumed onsite (MMBtu/unit)	o.	0.	0.
Total energy requirement (bbl crude equiv.)[a]	79.	28.	65.4
Electricity sold to grid annually (MWh, entire building)			o.
Annual peak electricity demand (kW, entire building)			5.2

Table IV-30. .—Albuquerque: Solar Photovoltaic System— Single Family House Using Flat-Plate Air-Cooled Silicon Arrays ($0.50/Watt); Building Equipped With SF-2 Space-Conditioning

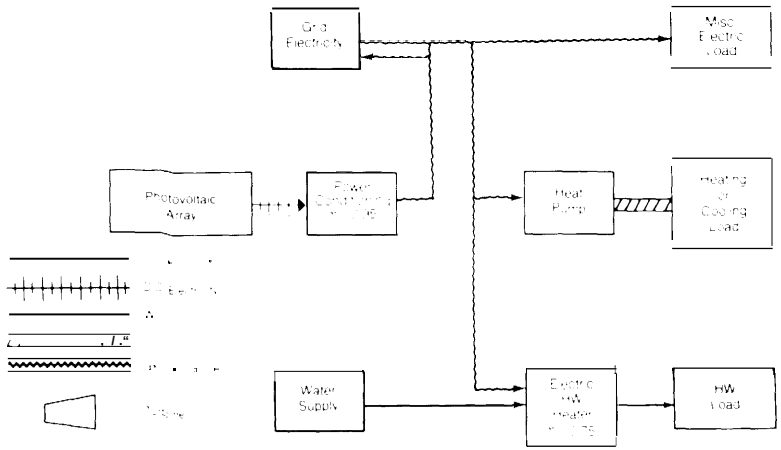

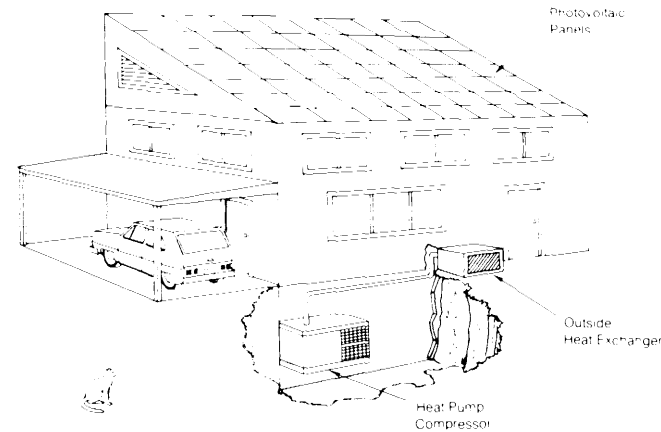

A. ITEMIZED COST OF COMPONENTS

Component	Size	Unit cost	First cost (incl. O&P)	Annual O&M	Life (yrs)
1. Heat pump	1.85 tons	800 $/ton	$1,480	$50	10
2. Ductwork	—	—	425	0	30
3. Electric hot water	40 gal	$225 ea.	225	0	15
4. Air-cooled silicon PV (500$/kw)(η = 0.12)	118 m²	88 $/m²	"5,190	o	30
—Silicon array @ 60 $/m²			"5,190	o	15
—Shipping @ 2 $/m²					
—Installation @ 8 $/m²					
—25% overhead and profit					
5. Power conditioning	4 kW	108	1,510	15	30
6. Lightning protection	—	—	300	0	30
TOTAL			$14,320	$65	

• ½ installed collector cost assumed replaced in 15 yrs., with total replacement in 30 yrs.

ANNUAL ENERGY FLOWS

(Conventional reference system is SF-2)

	Energy consumed by ref. system	Backup consumed w/ solar/conservation	Energy saved (% of total)
Net Electricity (bought-sold) (MWh/unit)	32.5	4.7	85.6
Fuel consumed onsite (MMBtu/unit)	o.	0.	0.
Total energy requirement (bbl crude equiv.)[a]	79.	11.	85.6
Electricity sold to grid annually (MWh, entire building)			15.3
Annual peak electricity demand (kW, entire building)			23.5

B. LEVELIZED MONTHLY COSTS PER UNIT TO CONSUMER (Dollars)[b,c]

(Conventional reference system is SF-2)

	Escalation of conventional energy costs					
	Constant real energy prices		Energy price escalation I		Energy price escalation II	
1. 1976 Startup						
cr. Costs using solar (conservation) system:						
Total with no incentives	215.	(284.)	229.	(297.)	283.	(351.)
Total with 20% ITC	196.	(267.)	209.	[280.)	263.	(334.)
Total with full incentives	170.	(211.)	183.	(225.)	238.	(279.)
b. Costs using conventional reference system	157.		187.		310.	
2. 1985 Startup[d]						
a. Costs using solar (conservation) system:						
(capitol related Cash	154.	[223.]	154.	[223.)	154.	(223.)
(operation & maintenance costs)	10.	(10.)	10.	[10.)	10.	(Io.)
(fuel bill)	o.	(o.)	o.	(o.)	o.	(o.)
(electric bill)	51.	(51.)	72.	(72.)	156.	[156.)
Total with no incentives	215.	(284.)	236.	(304.)	320.	[389.)
Total with 20% IT	196.	(267.)	217.	[288.)	301.	(372.)
Total with full incentives	170.	(211.)	191.	[232.)	275.	(316.)
b. Costs using conventional reference system	157.		204.		395.	

C. EFFECTIVE COST OF ENERGY TO CONSUMER

[Conventional reference system is SF-2)

Levelized cost of solar energy or 'conservation' energy[c]	Type of incentives given					
	No incentives		20% ITC		Full incentives	
$/MMBtu primary fuel	4.55	(7.05)	3.83	(6.44)	2.89	[4.40)
¢/kWh electricity	5.36	(8.30)	4.51	(7.58}	3.40	(5.18)

Levelized price paid for conventional energy[b,e]	Escalation of conventional energy costs		
	Constant real energy prices	Energy price escalation I	Energy price escalation II
$/MMBtu primary fuel	3.66	4.61	8.47
¢/kWh A&i+	4.31	5.42	9.97

Table IV-31 .—Albuquerque: Solar Photovoltaic System—Single Family House Using Flat-Plate Air-Cooled Thin"Film Arrays ($0.10/Watt); Building Equipped With SF-2 Space-Conditioning

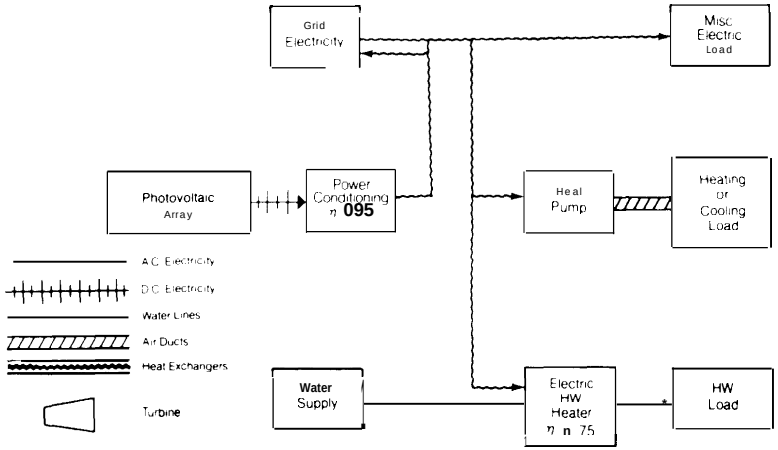

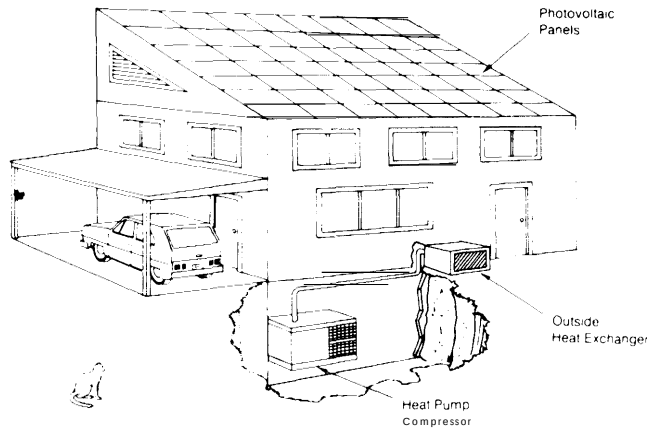

A. ITEMIZED COST OF COMPONENTS

Component	Size	Unit cost	First cost (incl. O&P)	Annual O & M	Life (yrs)
1. Heatpump	.1.85 tans	$800/ton	$1,480	$50	10
2. Ductwork	—	—	425	0	30
3. Electric hat water hooter	40 gal	$225 ea.	225	0	15
4. Thin film module (η =0.094) thin film @ 100 $/1kW	106 m²	25 $/m²	•1,330	0	30
—Thin film @ 10 $/m²			*1 ,330	0	15
——Installation @ 8 $/m					
—Shipping @ 2 $/m²					
—25% overhead and profit					
5. Power conditioning	10 kW	40 $/kW	400	4	30
6. Lightning protection	.—	—	300	0	30
TOTAL			$5,490	$54	

•½ installed collector cost assumed replaced in 15 yrs., with total replacement in 30 yrs.

ANNUAL ENERGY FLOWS

(Conventional reference system is SF-2)

	Energy consumed by ref. system	Backup consumed W/ solar/conservation	Energy saved (% of total)
Net Electricity (bought-sold) (MWh/unit)	32.5	13.0	59.9
Fuel consumed onsite (MMBtu/unit)	o.	0.	0.
Total energy requirement (bbl crude equiv.)[a]	79.	32.	59.9
Electricity sold to grid annually (MWh, entire building)			9.1
Annual peak electricity demand (kW, entire building)			24.1

B. LEVELIZED MONTHLY COSTS PER UNIT TO CONSUMER (Dollars)[b,c]

(Conventional reference system is SF-2)

	Escalation of conventional energy costs: Constant real energy prices		Energy @CO escalation I		Energy price ● Scabtim II	
1. 1976 Startup						
0. Costs using solar (conservation) system:						
Total with no incentives	142.	(169.)	160.	(187.)	232.	(259.)
Total with 20% ITC	137.	[165.)	154.	(182.)	226.	(255.)
Total with full incentives	129.	[149.)	147.	(167.)	219.	(239.]
b. Costs using conventional reference System	157.		187.		310.	
2. 1985 Startup[d]						
a. Costs using solar (conservation) system						
(capital related casts)	66.	(93.)	66.	(93.)	66.	(93.)
(operation & maintenance costs)	8.	(8.)	8.	(8.)	8.	(8.)
(fuel bill)	o.	(o.)	0.	(o.)	0.	(0.)
[electric bill)	68.	[68.)	96.	(96.)	208.	(208.)
Total with noincentives	142.	(169.)	170.	(197.)	282.	(309.)
Total with 20% IT	137.	(165.)	164.	(192.)	276.	[305.)
Total with full incentives	129.	[149.)	157.	(177.)	269.	[289.)
b. Costs using conventional reference system	157.		20.4.		395.	

c. EFFECTWE COST OF ENERGY TO CONSUMER

(Conventional reference system is SF-2)

Levelized cost of solar energy or 'conservation' energy[c]	Type of incentives given: No incentives		20% ITC		Full incentives	
$/MMBtu primary fowl	1.77	(3.20)	1.48	[2.96)	1.11	(2.16)
¢/kWh electricity	2.08	(3.771	1.75	(3.48)	1.31	(2.54)

Levelized price paid for conventional energy[b,e]	Escalation of conventional energy casts: Constant real energy prices	Energy price escalation I	Energy price escalation II
$/MMBtu primacy fuel	3.6d	4.61	8.47
$/k Wh electricity	4.31	5.42	9.97

Table IV-32.—Albuquerque: Solar Photovoltaic Cogeneration System—Single Family House Using One-Axis Concentrator With Si Cells ($15/Cells), Multitank Low-Temperature Thermal Storage; Building Equipped With SF-2 Space-Conditioning

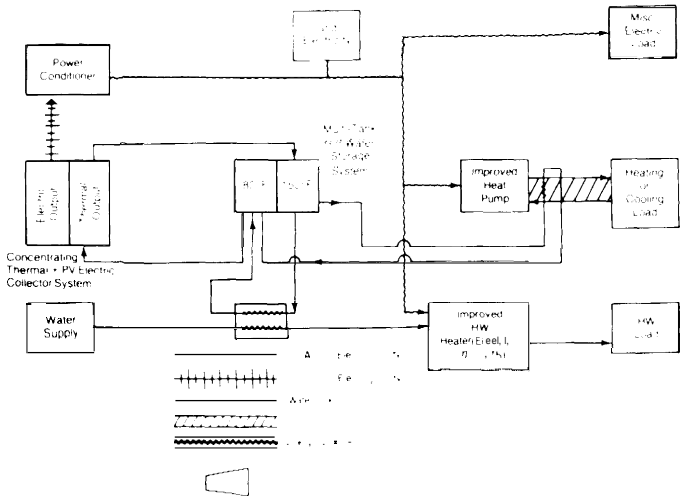

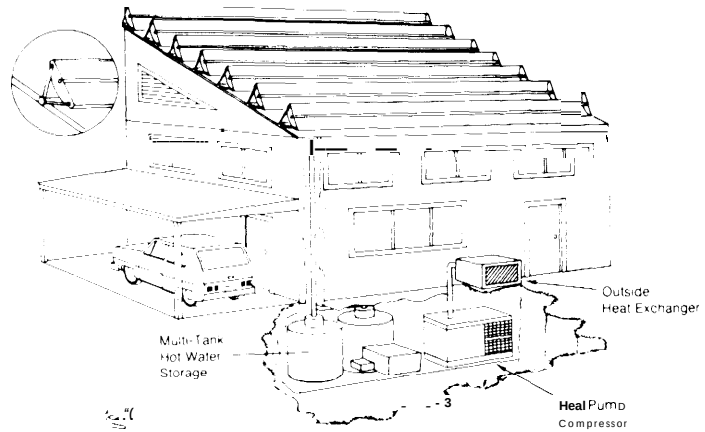

A. ITEMIZED COST OF COMPONENTS

Component	Size	Unit cost	First cost (incl. O&P)	Annual O&M	Life (yrs)
1. Electric heat pump	1.85 tons	800 $/ton	$1,480	$50	10
2. Ductwork	—	—	425	0	30
3. Multitank electric hot water and storage	200 kWh	3 $/kWh	600	0	30
4. Insulated steel pipe	125 ft	4.1 $/ft	$513	0	30
5. I-axis trackingsilicon module (cells cost $15,000/kW) ($\eta = 0.099$)	74 m²	293 $/m²	• 10,840	o	30
—Tracking collector @ 130 $/m²			•10,840	0	15
—Silicon concentrator cells@62$/m²					
—Shipping @ 2 $/m²					
—installation @ 40 $/m²					
—Overhead and profit @ 25%					
6 Pumps, controls and hat exchanger and miscellaneous equipment.	—	—	500	0	10
7 Thermal only collector area	18 m²	215 $/m²	.1 935	0	30
			.1 935	0	15
8. Power conditioning	7 kW	222 $/kW	1,550	16	30
9. Lightning protection	—	—	300	0	30
TOTAL			$30,918	$66	

• ½ installed collector cost assumed replaced in 15 yrs., with total replacement in 30 yrs.

ANNUAL ENERGY FLOWS

(Conventional reference system is SF-2)

	Energy consumed by ref. system	Backup consumed w/ solar/conservation	Energy saved (% of total)
Net Electricity (bought-sold) (MWh/unit)	32.5	2.4	92.7
Fuel consumed onsite (MMBtu/unit)	0.	o.	0.
Total energy requirement (bbl crude equiv.)[a]	79.	&	92.7
Electricity sold to grid annually (MWh, entire building)			5.7
Annual peak electricity demand (kW, entire building)			25.6

B. LEVELIZED MONTHLY COSTS PER UNIT TO CONSUMER (Dollars)[b,c]

(Conventional reference system is SF-2)

	Escalation of conventional energy costs		
	Constant real prices	Energy price escalation I	Energy price escalation II
1. 1976 Startup			
0. Costs using solar (conservation) system:			
Total with no incentives	362. (508.)	369. (515.)	395. (542.)
Total with 20% IT	316. (469.)	322. (475.)	349. [502.)
Total with full incentives	255. (337.)	261. (344.)	288. (371.]
b. Costs using conventional reference system	157.	187.	310.
2. 1985 Startup[d]			
a. Costs using solar (conservation) system:			
(capital related costs)	327. [473.)	327. (473.)	327. [473.)
(operation & maintenance costs)	10. (10.)	10. [10.)	10. (10.)
(fuel bill)	0. (0.)	0. (0.)	0. (0.)
(electric bill)	25. (25.)	36. (36.)	77. (77.)
Total with no incentives	362. [508.)	372. (519.)	414. (560.)
Total with 20% IT	316. (469.)	326. [479.)	368. (521.)
Total with full incentives	255. [337.)	265. (348.)	307. (389.)
b. Costs using conventional reference system	157.	204.	395.

C. EFFECTIVE COST OF ENERGY TO CONSUMER

(Convention reference system is SF-2)

Levelized cost of solar energy or 'conservation' energy[c]	Type of incentives given		
	No incentives	20% ITC	Full incentives
$/MMBtu primary fuel	10.04 (14.98)	8.47 (13.65)	6.41 (9,20)
¢/kWh electricity	11.81 (17.64)	9.97 [16.06)	755 (10.83)

Levelized price paid for conventional energy[b,e]	Escalation of conventional energy costs		
	Constant real energy prices	Energy price escalation I	Energy price escalation II
$/MMBtu primary fowl	3.66	4.61	8.47
~/k Wh electricity	4.31	5.42	9.97

Table IV-33.—Albuquerque: Conventional System—Insulated Single Family All Electric House With Heat Pump Heating (IF-2)

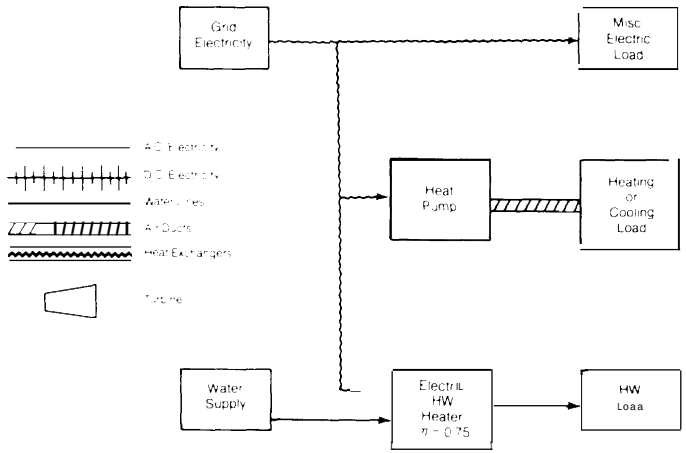

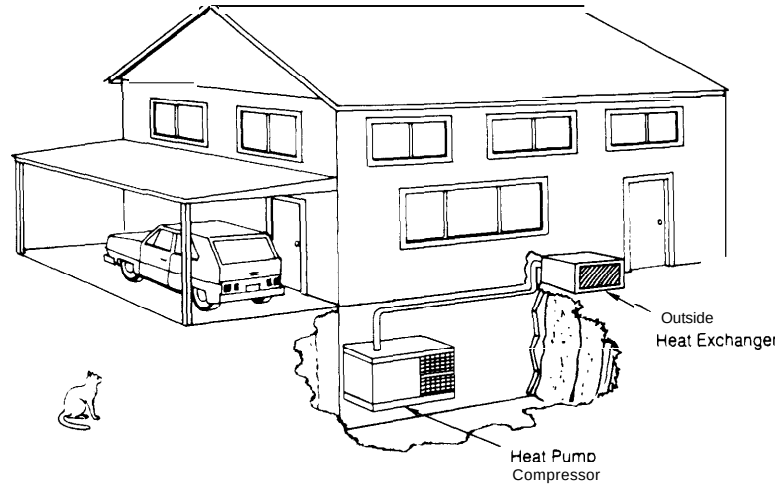

A. ITEMIZED COST OF COMPONENTS

Component	Size	Unit cost	First cost (incl. O&P)	Annual O&M	Life (yrs)
1. Heat pump	1.3 tons	800 $/ton	$1,040	$50	10
2. Ductwork	—	—	425	0	30
3. Electric water heater	40 gal	225 ea.	225	0	15
4. Extra insulation, storm doors and windows	—	—	981	0	30
TOTAL			$2,671	$50	

B. LEVELIZED MONTHLY COSTS PER UNIT TO CONSUMER (Dollars)[b,c]

(Conventional reference system is IF-2)

	Escalation of conventional energy costs					
	Constant real energy prices		Energy price escalation I		Energy price escalation II	
1. 1976 Startup						
Total with no incentives	142.	(155.)	168.	(181.)	275.	(289.]
Total with 20% ITC	142.	[155.)	168.	(181.)	275.	(289.)
Total with full incentives	142.	(155.)	16s.	(181.)	275.	(289.]
2. 1985 Startup[d]						
(capitol related costs)	32.	(46.)	32.	(46.)	32.	(46.)
(operation & maintenance costs)	7.	(7.)	7.	(7.)	7.	(7.)
(fuel bill)	o.	(o.)	o.	(0.)	0.	(o.)
(electric bill)	102.	(102.)	143.	(143.)	311.	(31 1.)
Total with no incentives	142.	(155.)	183.	(196.)	350.	[364.)
Total with 20% IT	142.	(155.)	183.	[196.)	350.	(364.)
Total with full incentive	142.	[155.)	183.	(196.)	350.	(364.)

C. EFFECTIVE COST OF ENERGY TO CONSUMER

(Conventional reference system is IF-2)

	Type of incentives given					
Levelized cost of solar energy or 'conservation' energy[c]	No incentives		20% ITC		Full incentives	
$/MMBtu primary fuel	N/A	(N/A)	N/A	(N/A)	N/A	(N/A)
¢/kWh electricity	N/A	(N/A)	N/A	(N/A)	N/A	(N/A)
	Escalation of conventional energy costs					
Levelized price paid for conventional energy[b,e]	Constant real energy prices		Energy price escalation I		Energy price escalation II	
$/MMBtu primary fowl	3.72		4.68		a d o	
~/k Wh electricity	4.38		5.51		10.12	

ANNUAL ENERGY FLOWS (Conventional reference system is IF-2)

	Energy consumed by ref. system	Backup consumed w/ sOlar/conservation	Energy saved (% of total)
Net Electricity (bought-sold) (MWh/unit)	28.0	28.0	0.
Fuel consumed onsite (MMBtu/unit)	o.	0.	0.
Total energy requirement (bbl crude equiv.)[a]	68.	68.	0.
Electricity sold to grid annually (MWh, entire kiting)			0.
Annual peak electricity demand (kW, entire building)			22.1

Table IV-34.—Albuquerque: Solar Photovoltaic System—Insulated Single Family House Using Flat-Plate Air-Cooled Silicon Arrays ($0.50/Watt); Building Equipped With IF-2 Space-Conditioning

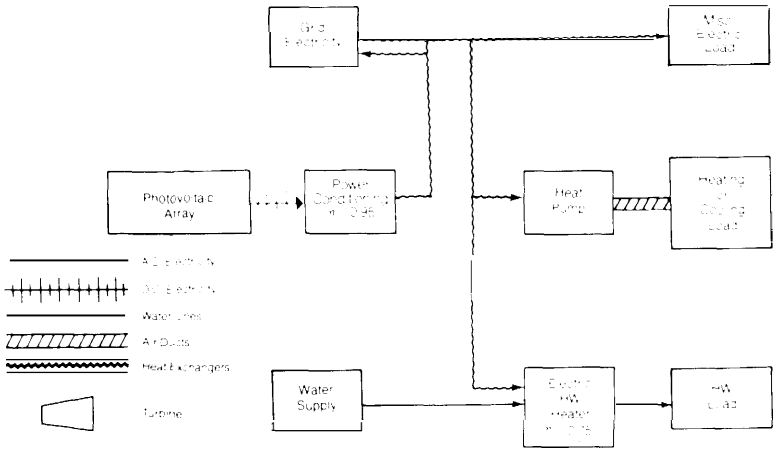

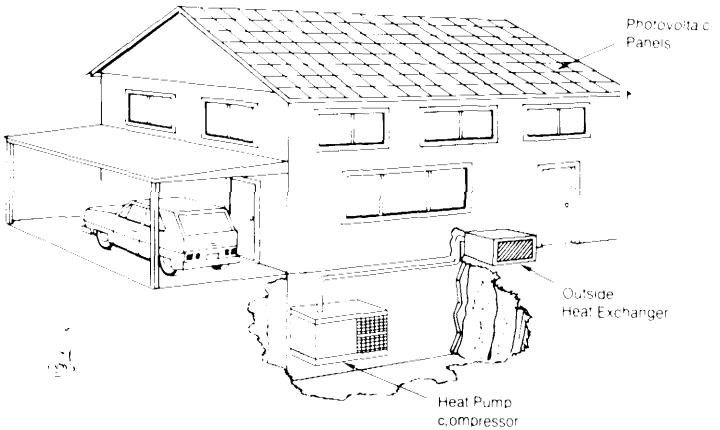

A. ITEMIZED COST OF COMPONENTS

Component	Size	Unit cost	First cost (incl. O&P)	Annual O & M	Life (yrs)
1. Heat pump	1.3 tons	800 $/ton	$1,040	$50	10
2 Ductwork	—	—	425	0	30
3. Electric hot water	40 gal	$225 ea.	225	0	15
4. Air-cooled silicon PV [500 $/kW) (η = O 12)	59 m'	88 $/m'	"2,600	o	30
—Silicon array @ 60 $/m²			'2,600	o	15
—Shipping @ 2 $/m*					
—installation @ 8 $/m²					
—25% overhead and profit					
5. Power conditioning	7.6 kW	113	859	9	30
6. Lightning protection	—	—	300	0	30
7. Extra insulation, storm doors and windows	—	—	981	0	30
TOTAL			$9,030	$59	

•½ installed collector cost assumed replaced in 15 yrs., with total replacement in 30 yrs

ANNUAL ENERGY FLOWS

[Conventional reference system is IF-2)

	Energy consumed by ref. system	Backup consumed w/ solar/conservation	Energy saved (% of total)
Net Electricity (bought-sold) (MWh/unit)	28.0	13.4	51.9
Fuel consumed onsite (MMBtu/unit)	o.	0.	0.
Total energy requirement (bbl crude equiv.)[a]	68.	33.	51.9
Electricity sold to grid annually (MWh, entire building)			6.7
Annual peak electricity demand (kW. entire building)			19.6

B. LEVELIZED MONTHLY COSTS PER UNIT TO CONSUMER (Dollars)[b,c]

(Conventional reference system is IF-2)

	Escalation of conventional energy costs		
	Constant real energy prices	Energy price escalation I	Energy price escalation II
1. 1976 Startup			
cc. Costs using solar (conservation) system:			
Total with no incentives	172. (214.)	189. (231.)	258. (301.)
Total with 20% IT	161. (206.)	178. (223.)	248. (292.)
Total with full incentives	14a. (176.)	165. (194.)	234. (263.)
b. Costa using conventional reference system	142.	168.	276.
2. 1985 Startup[d]			
CC. Costs using solar (conservation) system:			
(capital related Cash	97. [140.)	97. (140.)	97. (140.)
(operation & maintenance costs)	9. (9.)	9. (9.)	9. (9.)
(fuel bill)	o. (0.)	o. (0.)	o. (0.)
(electric bill)	66. [66.)	92. (92.)	200. (200.)
Total with no incentives	172. (214.)	198. (241.)	306. (349.)
Total with 20% IT	161. (206.)	188. (232.)	296. (340.)
Total with full incentives	148. (176.)	174. (203.)	282. [31 1.)
b. Costs using conventional reference system	142.	183.	350.

C. EFFECTIVE COST OF ENERGY TO CONSUMER

(Conventional reference system is IF-2)

Levelized cost of solar energy or 'conservation' energy[c]	Type of incentives given		
	No incentives	20% ITC	Full incentives
$/MMBtu primary fuel	4.62 (7.62)	3.91 (7.01)	2.96 [4.97)
¢/kWh electricity	5.44 (8.97)	4.60 (8.25)	3.49 (5.85)

Levelized price paid for conventional energy[b,e]	Escalation of conventional energy costs		
	Constant real energy prices	Energy price escalation I	Energy price escalation II
$/MMBtu primary fuel	3.72	4.68	8.60
¢/kWh electricity	4.38	5.51	10.12

Table IV-35.-Albuquerque: Solar Photovoltaic System—Single Family House Using Flat-Plate, Air-Cooled Silicon Arrays ($0.50/Watt), Battery Electrical Storage; Building Equipped With IF-2 Space-Conditioning

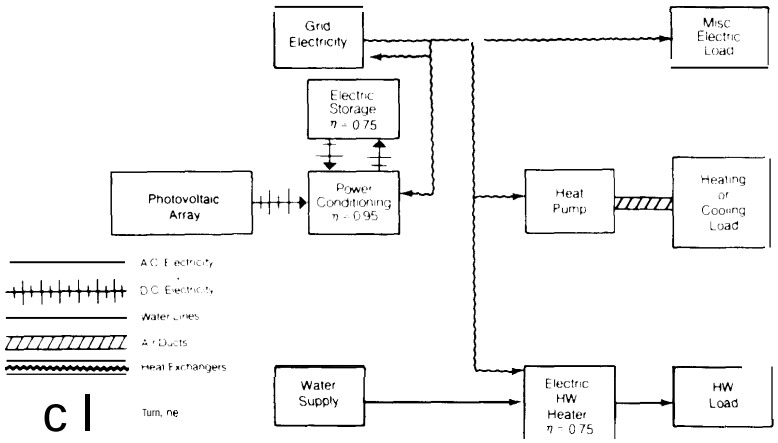

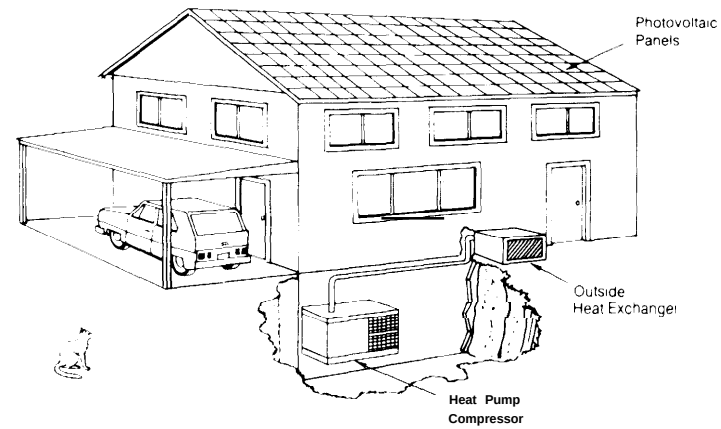

A. ITEMIZED COST OF COMPONENTS

component	Size	Unit cost	First cost (incl. O&P)	Annual O & M	Life (yrs)
1. Heat pump	1.3 tons	800 $/ton	$1,040	$50	10
2. Ductwork	—	—	425	0	30
3. Electric hot water	40 gal	S225 ea.	225	0	15
4. Air-coded silicon PV (500 $/kW)(η = 0.12)	59 m²	88 S/m'	● 2,boo	o	30
——Silicon array @ 60 $/m²			*2,600	0	15
——Shipping @ 2 $/m'					
——Installation @ 8 $/m*					
——25% overhead and profit					
5. Power conditioning	7 kW	114	800	8	30
6. Lightning protection	—	—	300	0	30
7. Batteries	20 kWh	70 kWh	1,400	4	10
8. Extra insulation, storm doors and windows	—	—	981	0	30
TOTAL			$10,371	$62	

• ½ installed collector cost assumed replaced in 15 yrs., with total replacement in 30 yrs

ANNUAL ENERGY FLOWS

(Conventional reference system is IF-2)

	Energy consumed by ref. system	Backup consumed W/ solar/conservation	Energy saved (% of total)
Net Electricity (bought-sold) (MWh/unit)	28.0	15.3	45.2
Fuel consumed onsite (MMBtu/unit)	o.	0.	0.
Total energy requirement (bbl crude equiv.)[a]	68.	37.	45.2
Electricity sold to grid annually (MWh, entire building)			.1
Annual peak electricity demand (kW, entire building)			19.6

B. LEVELIZED MONTHLY COSTS PER UNIT TO CONSUMER (Dollars)[b,c]

(Conventional referee system is IF-2)

	Escalation of conventional energy costs		
	Constant real energy prices	Energy price escalation I	Energy price escalation II
1. 1976 Startup			
a. Costs using solar (conservation) system:			
Total with no incentives	192. (243.)	207. [259.)	272. (323.)
Total with 20% ITC	179. (232.)	195. (248.)	260. (313.)
Total with full incentives	163. (197.)	179. [213.)	243. (277.)
b. Costs using conventional reference system	142.	168.	276.
2. 1985 Startup[d]			
0. Costs using solar (conservation) system:			
(capitol related casts	121. (172.)	121. (172.]	121. (172.)
(operation & maintenance costs)	9. [9.)	9. (9.)	9. (9.]
(fuel bill)	o. (0.)	o. (0.]	o. (o.)
(electric bill)	61. (61.)	86. [86.)	186. (186.)
Total with no incentive	192. (243.)	216. (267.)	317. (368.)
Total with 20% ITC	179. [232.)	204. (257.)	304. (357.)
Total with full incentives	163. (197.)	188. (222.)	288. [322.)
b. Costs using conventional reference system	142.	183.	350.

C. EFFECTIVE COST OF ENERGY TO CONSUMER

(Conventional reference system is IF-2)

Levelized cost of solar energy or 'conservation' energy[c]	Type of incentives given		
	No incentives	20% ITC	Full incentives
$/MMBtu primary fuel	7.30 (1 1.43)	6.31 (10.58)	4.99 (7.75)
¢/kWh electricity	8.60 [13.45)	7.42 (12.45)	5.88 (9.12)

Levelized price poid for conventional energy[b,c]	Escalation of conventional energy costs		
	Constant real energy prices	Energy price escalation I	Energy price escalation II
$/MMBtu primary fuel	3.72	4.68	8.60
¢/kWh electricity	4.38	5.5J	10. J2

Table IV-36.—Albuquerque: Solar Photovoltaic System—Insulated Single Family House Using Flat-plate Air-Cooled Silicon Arrays ($0.50/Watt); Building Equipped With Improved IF-2 Space-Conditioning

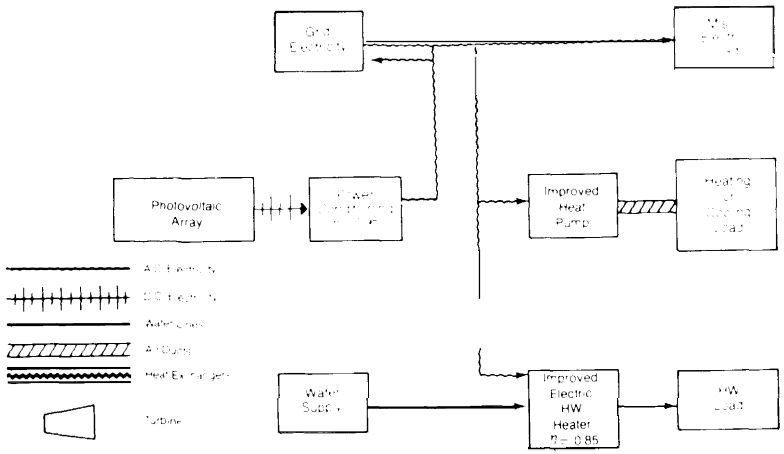

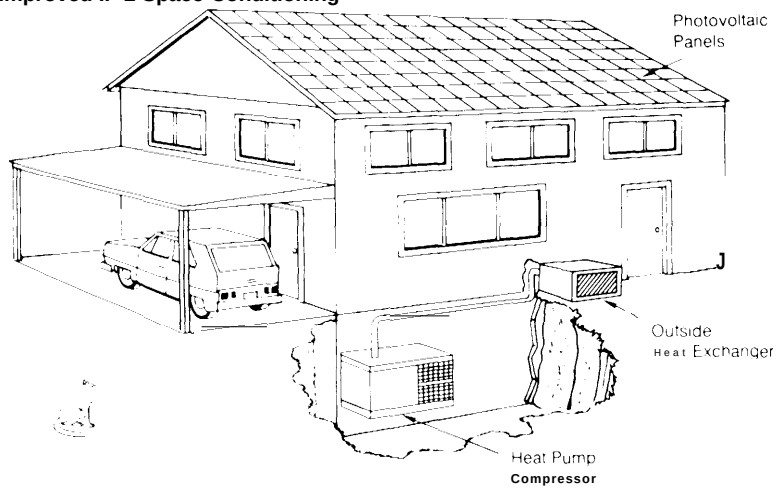

A. ITEMIZED COST OF COMPONENTS

Component	Size	Unit cost	First cost (incl. O&P)	Annual O&M	Life (yin)
1. Heat pump	1.3 tons	960 $/ton	$1,250	$50	10
2. Ductwork	—	—	425	0	30
3. Electric hot water	40 gal	$225 ea.	225	0	15
4. Air-cooled silicon PV (500 $/kw) (q= 0.12)	59 m²	88 $/m²	*2,600	o	30
—Silicon array @ 60 $/m*			"2,600	o	15
——Shipping @ 2 $/m²					
—Installation @ 8 $/m²					
——25% overhead and profit					
5. Power conditioning	7 kW	114	800	8	30
6. Lightning protection	—	—	300	0	30
7. Extm insulation, storm doors and windows	—	—	981	0	30
TOTAL			$9,181	$58	

* ½ installed collector cost assumed replaced in 15 yrs., with total replacement in 30 yrs.

ANNUAL ENERGY FLOWS

(Conventional reference system is IF-2)

	Energy consumed by ref. system	Backup consumed w/ solar/conservation	Energy saved (% of total)
Net Electricity (bought-sold) (MWh/unit)	28.0	10.9	61.2
Fuel consumed onsite (MMBtu/unit)	0.	0.	0.
Total energy requirement (bbl crude equiv.)[a]	68.	27.	61.2
Electricity sold to grid annually (MWh, entire building)			6.7
Annual peak electricity demand (kW, entire building)			16.7

B. LEVELIZED MONTHLY COSTS PER UNIT TO CONSUMER (Dollars)[b,c]

(Conventional reference system is IF-2)

	Escalation of conventional energy costs: Constant real energy prices		Energy price escalation I		Energy price escalation II	
1. 1976 Startup						
0. Costs using solar (conservation) system:						
Total with no incentives	166.	[210.)	181.	(225.)	242.	(286.)
Total with 20% IT	156.	(201.)	171.	(216.)	231.	(277.)
Total with full incentives	142.	(171.)	157.	(186.)	218.	(247.)
b. Costs using conventional reference system	142.		168.		276.	
2. 1985 Startup[d]						
0. Costs using solar (conservation) system:						
(capital related costs)	100.	(144.)	100.	[144.)	100.	(14.)
(operation & maintenance costs)	9.	(9.)	9.	(9.)	9.	(9.)
(fuel bill)	0.	(o.)	0.	[0.)	0.	(0.)
(electric bill)	57.	[57.)	81.	(81.)	175.	(175.)
Total with no incentives	166.	(210.)	189.	[233.)	284.	(328.)
Total with 20% IT	156.	[201.)	179.	(224.)	273.	(319.)
Total with full incentives	142.	[171.)	165.	[195.)	260.	[289.)
b. Costs using conventional reference system	142.		183.		3s0.	

C. EFFECTIVE COST OF ENERGY TO CONSUMER

(Conventional reference system is IF-2)

Levelized cost of solar energy or 'conservation' energy[c]	Type of incentives given: No incentives		20% ITC		Full incentives	
$/MMBtu primary fuel	4.11	(6.72]	3.49	(6.19)	267	(4.42)
¢/kWh electricity	4.84	(7.91)	4.10	(7.29)	3.14	(5.20)

Levelized price paid for conventional energy[b,c]	Escalation of conventional energy costs: Constant real energy prices	Energy price escalation I	Energy price escalation II
$/MMBtu primary fuel	3.72	4.68	8.60
¢/kWh electricity	4.38	5.51	10.12

Table IV-37.—Albuquerque: Solar Photovoltaic System—Insulated Single Family House Using Flat"Plate Air. Cooled Thin-Film Arrays ($0.30/Watt); Building Equipped With IF-2 Space-Conditioning

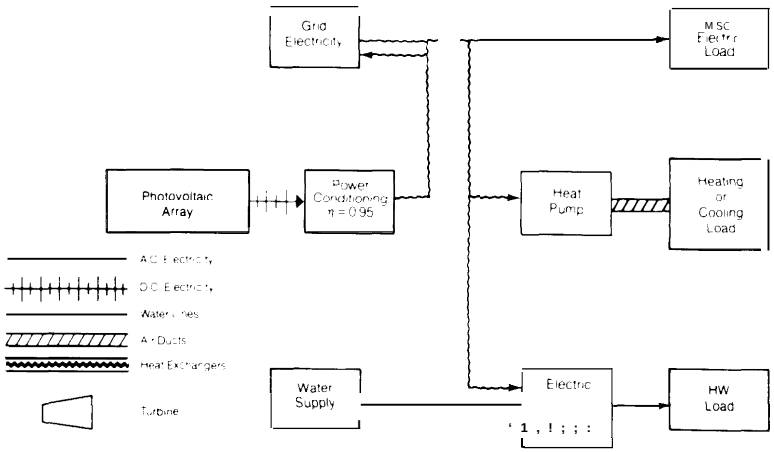

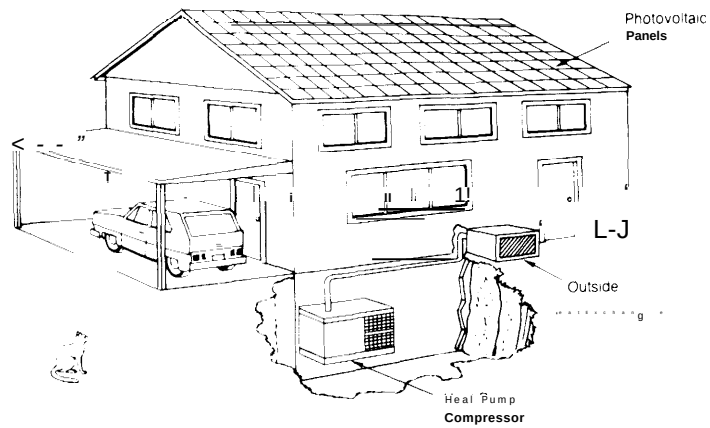

A. ITEMIZED COST OF COMPONENTS

Component	Size	Unit cost	First cost (incl O&P)	Annual O & M	Life (yrs)
1. Electric heat prep.	1.3 tans	$800	$1,040	$50	10
2. Ductwork	—	—	425	0	30
3. Electric water heater	40 gal	225 ea.	225	0	15
4. Thin film module (η = .073) 300 $/kW	53 m²	40	1 060	0	30
—Thin film @ 22 $/m²			1 060	0	15
—-installation-@ 8 $/m²					
—-Shipping @ 2 $/m'					
——25% overhead and profit					
5. Power conditioning	4.3 kw	118	507	5	30
6. Lightning protection	—	—	$300	o	30
7. Extra insulation, starer doors and windows	—	—	S981	o	30

. ' ₂ Installed collector cost assumed replaced in 15 yrs with total replacement in 30 yrs

B. LEVELIZED MONTHLY COSTS PER UNIT TO CONSUMER (Dollars)[b,c]

(Conventionalreference system is IF-2)

	Escalation of conventional energy costs					
	Constant real energy prices		Energy price escalation I		Energy price escalation II	
1. 1976 Startup						
a. Costs using solar (conservation) system:						
Total with no incentives	149.	[175.)	169.	(195.)	253.	(279.)
Total with 20% IT...	1 4 .	(171.)	164.	(191.)	248.	(275.)
Total with full incentives	138.	[157.)	158.	(178.)	242.	[262.)
b. Costs using conventional reference system.....	142.		168.		276.	
2. 1985 Startup[d]						
a. Costs using solar (conservation) system:						
(capital related costs)	61.	(87.)	61.	(87.)	61.	(87.)
(operation & maintenance costs)	8.	(8.)	8.	(8.)	8.	(8.)
(fuel bill)	0.	(0.)	0.	(0.)	0.	(0.)
(electric bill)	79.	(79.)	112.	[1 12.)	242.	(242.)
Total with no incentives	149.	(175.)	181.	(207.)	311.	[337.)
Total with 20% IT...	1 4 .	(171.)	176.	[203.)	306.	(333.)
Total with full incentives	138.	(157.)	170.	(189.)	300.	(320.)
b. Cosh using conventional reference system	142.		183.		350.	

C. EFFECTIVE COST OF ENERGY TO CONSUMER

(Conventional reference system is IF-2)

Levelized cost of solar energy or 'conservation' energy'	Type of incentives given					
	No incentives		20% ITC		Full incentives	
$/MMBtu primary fuel	3.66	(6.95)	3.07	(6.45)	2.29	(4.77')
¢/kWh electricity	4.30	(8.18)	3.61	(7.59)	2.70	[5.62)

Levelized price paid for conventional energy[b,e]	Escalation of conventional energy costs		
	Constant real energy prices	Energy price escalation I	Energy price escalation II
$/MMBtu primary fad	3.72	4.68	8.60
¢/kWh electricity	4.38	5.51	10.12

ANNUAL ENERGY FLOWS

(Conventional reference system is IF-2)

	Energy consumed by mf. system	Backup consumed W/ solar/conservation	Energy saved ['Y. of total)
Net Electricity (bought-sold) (MWh/unit)	28.0	19.8	29.1
Fuel consumed onsite (MMBtu/unit)	o.	0.	
Total energy requirement (bbl crude equiv.)[f]	68.	49.	29°i
Electricity sold to grid annually (MWh, entire building)			2.4
Annual peak electricity demand (kW, entire building)			20.0

Table V-38.—Albuquerque: Solar Photovoltaic System—Insulated Single Family House Using Flat-Plate Air-Cooled Thin-Film Arrays ($0.10/Watt); Building Equipped With IF-2 Space-Conditioning

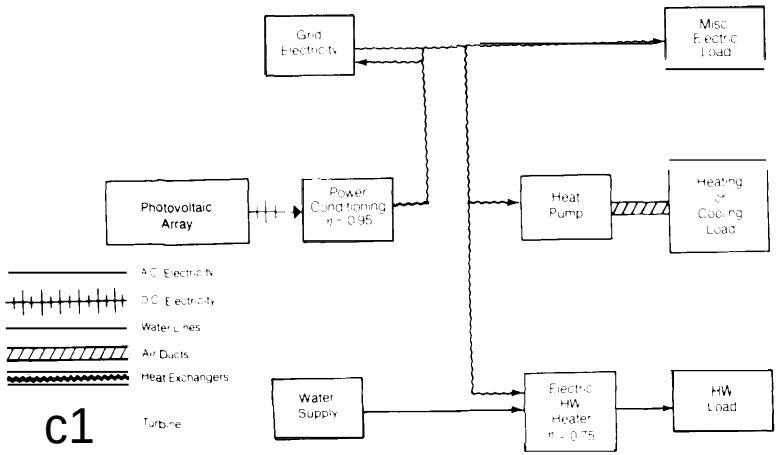

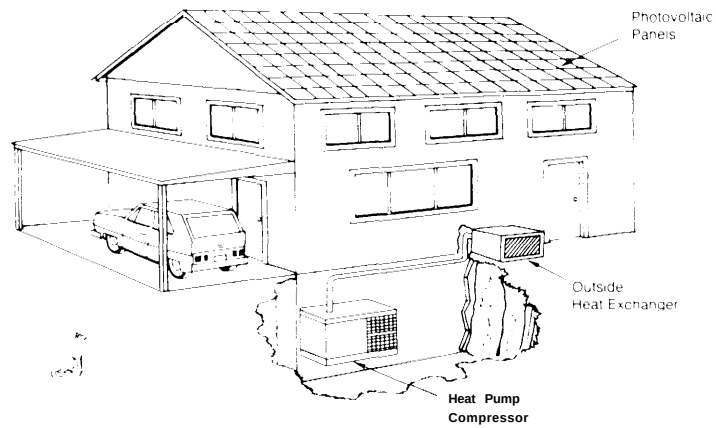

A. ITEMIZED COST OF COMPONENTS

Component	Size	Unit cost	First cost (incl. O&P)	Annual O & M	Life (yrs.)
1. Electric heat pump	1.3 tons	$800	$1,040	$50	10
2. Ductwork	—	—	425	0	30
3. Electric water hooter	40 gal	225 ea	225	0	15
4. Thin film module (η = 0.94) 100$/kW	53 mm'	25	.663	0	30
—Thin film (61 10 $/m²)			.663	0	15
—-insulation @ 8 $/m'					
——Shipping 22 $/m²					
—-25% overhead and profit					
s. power conditioning	5.5 kW	40	220	2	30
6. Lightning protection	—	—	300	0	30
7. Extra insulation, storm doors and windows	—	—	981	0	30

. „ installed collector cost assumed replaced in 15 yrs with total replacement in 30 yrs

ANNUAL ENERGY FLOWS
(Conventional reference system is IF-2)

	Energy consumed by ref. system	Backup consumed w/ u+Or/consolation	Energy saved (% of total)
Net Electricity (bought-sold) (MWh/unit)	28.0	17.5	37.5
Fuel consumed onsite (MMBtu/unit)	0.	0.	
Total energy requirement (bbl crude equiv.)[a]	68.	43.	37°5
Electricity sold to grid annually (MWh, entire building)			3.9
Annual peak electricity demand (kW, entire building)			19.9

B. LEVELIZED MONTHLY COSTS PER UNIT TO CONSUMER (Dollars)[b,c]
(Conventional reference system is IF-2)

	Escalation of conventional energy costs: Constant real energy prices	Energy price escalation I	Energy price escalation II
1 1976 Startup			
0. Costs using solar (conservation) system:			
Total with no incentives	132. (154.)	152. [173.)	23a [251.)
Total with 20% IT	129. (151.)	149. (170.)	227. [249.)
Total with full incentives	125. (143.)	145. [162.)	223. (24a)
b. Costs using conventional reference system	142.	168.	276.
2. 1985 Startup[d]			
a. Costs using solar (conservation) system:			
(capital related Cost[e])	50. (72.)	50. (72.)	50. (72.]
(operation & maintenance costs)	8. (8.)	8. (8.)	8. (8.)
(fuel bill)	o. (0.)	o. [0.)	o. [0.)
(electric bill)	74. (74.]	104. (104.)	226. [226.)
Total with no incentives	132. [154.)	162. [184.)	284. (306.)
Total with 20% IT	129. [151.)	159. (181.)	281. (303.)
Total with full incentives	125. (143.)	155. (173.)	277. (295.)
b. Costs using conventional reference system	142.	183.	330.

C. EFFECTIVE COST OF ENERGY TO CONSUMER
(Conventional reference system is IF-2)

	Type of incentives given: No incentives	20% ITC	Full incentives
Levelized cost of solar energy or 'conservation' energy[c]			
$/MMBtu primary fuel	1.77 (3.85)	1.48 (3.61)	1.10 (2.79)
¢/kWh electricity	2.08 [4.53)	1.74 [4.24)	1.30 [3.28)

	Escalation of conventional energy costs: Constant real energy prices	Energy price escalation I	Energy price escalation II
Levelized price paid for conventional energy[b,e]			
$/MMBtu primary W	3.72	4.68	8.60
t/k Wh electricity	4.38	5.51	10.12

Table IV-39.—Albuquerque: Solar Photovoltaic System—Insulated Single Family House Using Flat-Plate Air. Cooled Thin-Film Arrays ($O.IO/Watt); Building Equipped With Improved SF-2 Space-Conditioning

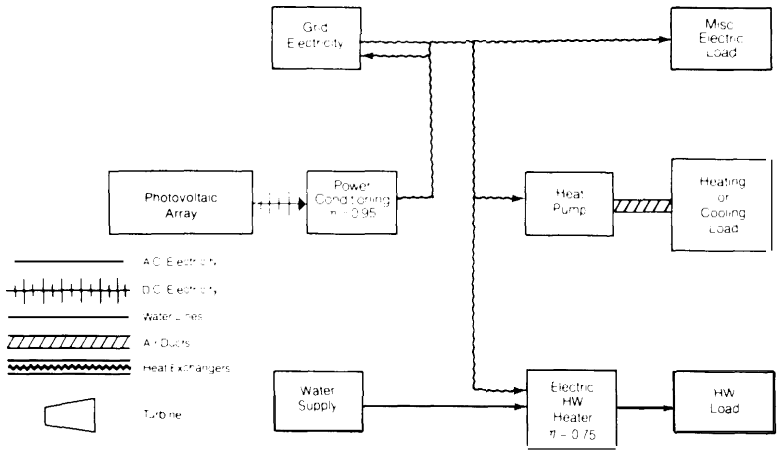

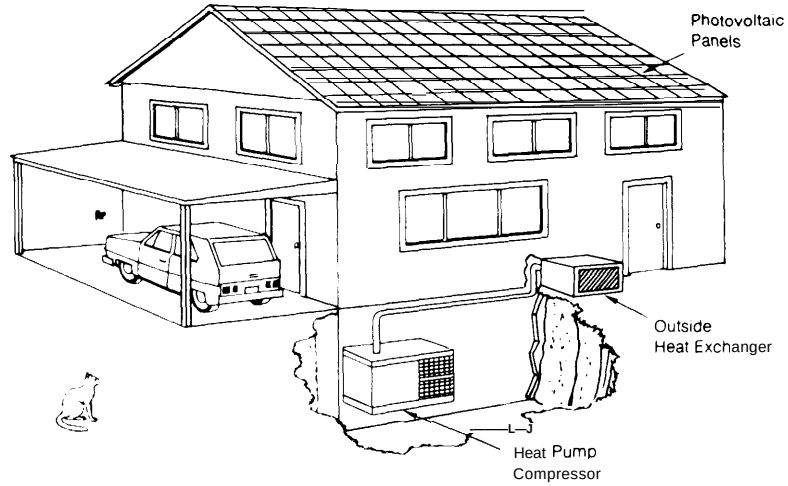

A. ITEMIZED COST OF COMPONENTS

component	Size	Unit cost	First cost (incl. O&P)	Annual O & M	Life (yrs)
1. Electric heat pump	1.3 tons	960 $/ton	$1,250	$50	10
2. Ductwork	—	—	425	0	30
3. Electric water heater	40 gal	$225 ea.	225	0	15
4. Thin film module (q= 0.094) 100 $/kW	53 m²	25 $/m²	● 663	0	30
—Thin film @ 10 $/m²			● 663	0	15
—Installation @ 8 $/m²					
—Shipping @ 2 $/m²					
—25% overhead and profit					
5. Power conditioning	5 kW	40 $/kW	200	2	30
6. Lightning protection		—	300	0	30
7. Extra insulation, storm doors and windows	—	—	981	0	30
TOTAL			$4,707	$52	

* ½ installed collector cost assumed replaced in 15 yin., with total replacement in 30 yrs.

ANNUAL ENERGY FLOWS

[conventional reference system is IF-2)

	Energy consumed by ref. system	Backup consumed w/ solar/conservation	Energy saved (% of total)
Net Electricity (bought-sold) (MWh/unit)	28.0	15.0	46.2
Fuel consumed onsite (MMBtu/unit)	0.	0.	0.
Total energy requirement (bbl crude equiv.)[a]	68.	37.	46.2
Electricity sold to grid annually (MWh, entire building)			3.9
Annual peek electricity demand (kW, retire building)			17.0

B. LEVELIZED MONTHLY COSTS PER UNIT TO CONSUMER (Dollars)[b,c]

(Conventional reference system is IF-2)

	Escalation of conventional energy costs					
	Constant real energy prices		Energy price escalation I		Energy price escalation II	
1. 1976 Startup						
0. Costs using solar (conservation) system:						
Total with no incentives	128.	(151,)	145.	(168.)	215.	(238.)
Total with 20% ITC	125.	(148.)	142.	(165.)	212.	(235.)
Total with full incentives	120.	(139.)	138.	(156.)	208.	(226.]
b. Costs using conventional reference Slum.	142.		168.		276.	
2. 19s5 Startup[d]						
a. Costs using solar (conservation) system:						
(capitol related corm.	54.	(77.)	54.	(77.)	54.	177.)
(operation & maintenance costs)	8.	(8.)	8.	(8.)	8.	(8.)
(fuel bill)	o.	(0.)	o.	(0.)	0.	(0.)
(electric bill)	66.	(66.)	93.	[93.)	202.	(202.)
Total with no incentives	128.	(151.)	155.	(177.)	264.	(286.)
Total with 20% IT	125.	(148.]	151.	(175.)	260.	[283.)
Total with full incentives	120.	(139.)	147.	(165.)	256.	(274.)
b. Costs using conventional reference system.,	142.		183.		330.	

C. EFFECTIVE COST OF ENERGY TO CONSUMER

(Conventional reference system is IF-2)

Levelized cost of solar energy or 'conservation' energy[c]	Type of incentives given: No incentives		20% ITC		Full incentives	
$/MMBtu primary fad	1.71	[3.50)	1.46	(3.28)	1.12	(2.55]
¢/kWh electricity	2.02	(4.12)	1.71	(3.86)	1.31	(3.00)

Levelized price paid for conventional energy[b,e]	Escalation of conventional energy costs: Constant real energy prices	Energy price escalation I	Energy price escalation II
$/MMBtu primary &l	3.72	4.68	8.60
¢/kWh electricity	4.38	5.51	10.12

Table IV-40.—Albuquerque: Solar Photovoltaic Cogeneration System—Insulated Single Family House Using One-Axis Concentrator With Si Cells ($15/Watt cells), Multitank Low-Temperature Thermal Storage; Building Equipped With IF-2 Space. Conditioning

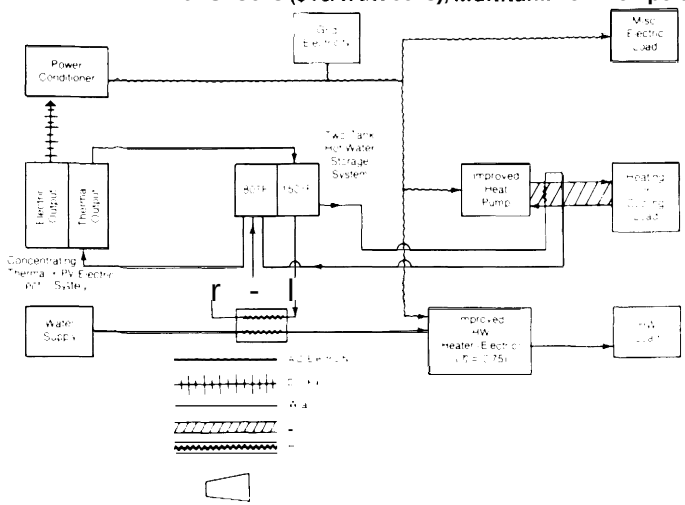

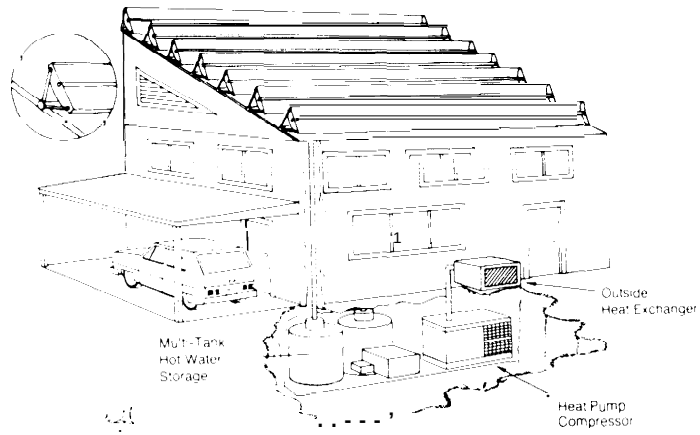

A. ITEMIZED COST OF COMPONENTS

Component	Size	Unit cost	First cost (incl. O&P)	Annual O&M	Life (yin)
1. Electric heat pump...	1.3 tom	964) $/ton	$1,250	$50	10
2. Ductwork		—	425	0	30
3. Multitank electric hot water and storage.....	200 kWh	3 $/kWh	600	0	30
4 Insulated steel pipe	125 ft	4.1 $/ft	513	0	30
5 1-axis hocking silicon module (cells cost $15,000/kW) (η = n nag).	37	293 $/m²	*54,201	0	30
——Tracking collector @ 130 $/m²			'54.201	o	15
——Silicon concentrator cells 62 $/m²					
——Shippinn @ 2$, m²					
——install tion @ 40 $/m*					
——Overhead and profit @ 25"/.					
6. Pumps, controls and heat ● xchoWr and miscellaneous equipment	—	—	500	0	10
7. Thermal only collector area.....	9	215 $/m²	.968	0	30
			.968	0	15
8. Power conditioning	4 kW	233 $/kW	932	9	30
9. Lightning protection		—	300	0	30
10. Extra insulation, storm doors ond windows			981	0	30
TOTAL.....			$115,839	$59	

•½ installed collector cost assumed replaced m 15 yrs., with total replacement in 30 yrs.

ANNUAL ENERGY FLOWS (Conventional reference system is IF-2)

	Energy consumed by ref. system	Backup consumed w/ sOiOr/conservation	Energy saved (% of total)
Net Electricity (bought-sold) (MWh/unit).....	28.0	6.5	76.7
Fuel consumedonsite (MMBtu/unit).....	o.	0.	0.
Total energy requirement (bbl crude equiv.)[a] . . .	68.	16.	76.7
Electricity sold to grid annually (MWh, entire building).....			2.0
Annual peak electricity demand (kW, entire building).....			17.7

B. LEVELIZED MONTHLY COSTS PER UNIT TO CONSUMER (Dollars)[b,c]

(Conventional reference system is IF-2)

	Escalation of conventional energy costs		
	Constant real energy prices	Energy price escalation I	Energy price escalation II
1. 1976 Startup			
a. Costs using solar (conservation) system:			
Total with no incentives.....	235. (323.)	244. (332.)	281. (370.)
Total with 20% IT.....	210. [302.)	219. (31 1.)	256. (348.)
Total with full incentives.....	153. (230.)	162. (240.)	199. (277.)
b. Costs using conventional reference system	142	Ids.	275.
2. 1985 Startup[d]			
a. Costs using solar (conservation) system:			
(capital related costs).....	191. (279.)	191. (279.)	191. [279.)
(operation & maintenance costs).....	9. (9.)	9. (9.)	9. (9.)
(fuel bill).....	o. (o.)	0. (o.)	o. (0.)
(electric bill).....	35. (35.)	50. (50.]	108. (108.)
Total with no incentives.....	235. [323.)	249. (337.)	307. (395.)
Total with 20% IT.....	210. (302.)	224. (316.]	282. (374.)
Total with full incentives.....	153. (230.)	167. (245.)	225. [303.)
b. Costs using conventional reference system	142.	183.	350.

C. EFFECTIVE COST OF ENERGY TO CONSUMER

IConve.tied reference system is IF-2)

Levelized cost of solar ● rwgy or 'conservation' energy[c]	Type of incentives given: No incentives	20% ITC	Full incentives
$/MMBtu primary fuel.....	7.60 (1 1.80)	6.41 (10.78)	3.71 (7.40)
¢/kWh electricity.....	8.95 [13.89)	7.55 (12.69)	4.36 [8.70)

Levelized price paid for conventional energy[b,e]	Escalation of conventional energy costs: Constant real energy prices	Energy price escalation I	Energy price escalation II
$/MMBtu primary Fuji.....	3.72	4.68	8.60
¢/kWh electricity.....	4.38	5.51	10.12

Table IV-41.—Albuquerque: Solar Photovoltaic Cogeneration System—insulated Single Family House Using Plastic Dye Photovoltaic Concentrator Multitank Low. Temperature Storage; Building Equipped With IF-2 Space-Conditioning

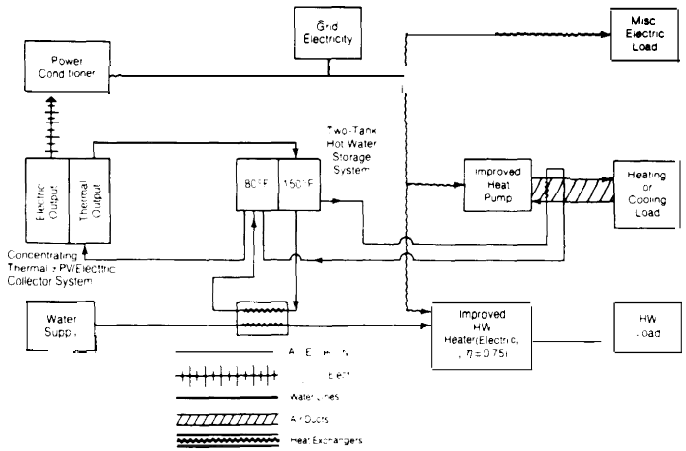

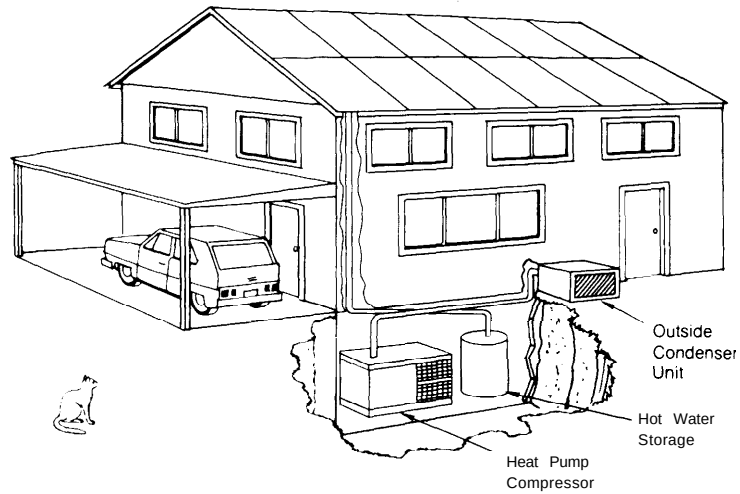

A. ITEMIZED COST OF COMPONENTS

Component	Size	Unit cost	First cost (incl. O&P)	Annual O & M	Life (yrs)
1. Electric heat pump	1.3 tons	800 $/ton	$1,040	$50	10
2. Ductwork	—	—	425	0	30
3. Electric hot water and multitank law temperature storage	200 kWh	3 $/kWh	600	0	30
4. Insulated steel pipe	125 ft	4.1 $/ft	513	0	30
5. Nontracking 100X plastic concentrator with 30% efficient cells.	38 m²	103 $/m²	•1,960	0	30
—Plexiglass and dyes @ 45 $/m²			•1,960	0	15
—Cells @ 15 $/m²					
—Shipping @ 2 $/m²					
—Installation @ 20 $/m²					
—25% overhead and profit					
6. Pumps, controls, and heat exchanger	—	—	500	0	10
7. Power conditioning	8.5 kW	53 $/kW	450	7	30
8. Lightning protection	—	—	300	0	30
9. Extra insulation, storm doors and windows	—	—	981	0	30
TOTAL			$8,729	$57	

•½ installed collector cost assumed replaced in 15 yrs., with total replacement in 30 yrs.

ANNUAL ENERGY FLOWS (Conventional reference system is IF-2)

	Energy consumed by ref. system	Backup consumed w/ solar/conservation	Energy saved (% of total)
Net Electricity (baught.said) (MWh/unit)	28.0	-.2	100.8
Fuel consumed onsite (MMBtu/unit)	0.	0.	0.
Total energy requirement (bbl crude equiv.)[a]	68.	-1.	100.8
Electricity said to grid annually (MWh, entire building)			9.5
Annual peak electricity demand (kW, entire building)			19.8

B. LEVELIZED MONTHLY COSTS PER UNIT TO CONSUMER (Dollars)[b,c]

(Conventional reference system is IF-2)

	Escalation Of conventional energy costs					
	Constant real energy prices		Energy price escalation I		Energy price escalation II	
1. 1976 Startup						
a. Costs using solar (conservation) system:						
Total with no incentives	124.	(166.)	129.	(171.)	153.	(195.)
Total with 20% IT	114.	(157.)	120.	(163.)	143.	(187.)
Total with full incentives	92.	(130.)	98.	(135.)	121.	(159.)
b. Costs using conventional reference system	142.		168.		275.	
2. 1985 Startup[d]						
a. Costs using solar (conservation) system:						
(capital related Cash	93.	(135.)	93.	(135.)	93.	(135.)
(operation & maintenance costs)	8.	(8.)	8.	(8.)	8.	(8.)
(fuel bill)	0.	(0.)	0.	(0.)	0.	(0.)
(electric bill)	22.	(22.)	31.	(31.)	68.	(68.)
Total with no incentives	124.	(166.)	133.	(175.)	170.	(211.)
Total with 20% IT	114.	(157.)	123.	(166.)	160.	(203.)
Total with full incentives	92.	(130.)	101.	(139.)	138.	(175.)
b. Costs using conventional reference system	142.		163.		3s0.	

C. EFFECTIVE COST OF ENERGY TO CONSUMER

(Conventional reference system is IF-2)

Levelized cost of solar energy or 'conservation' energy[c]	Type of incentives given					
	No incentives		20% ITC		Full incentives	
$/MMBtu primary fuel	2.23	(3.75)	1.88	(3.45)	1.08	(2.45)
¢/kWh electricity	2.63	(4.41)	2.21	(4.05)	1.27	(2.88)

Levelized price paid for conventional energy[b,e]	Escalation of conventional energy casts		
	Constant real energy prices	Energy price escalation I	Energy price escalation II
$/MMBtu primary fuel	3.72	4.68	8.60
¢/kWh electricity	4.38	5.51	10.12

Table IV-42.—Albuquerque: Solar Photovoltaic System—Insulated Single Family House Using Plastic Dye Photovoltaic Concentrator With Passive Cooling; Building Equipped With IF-2 Space-Conditioning

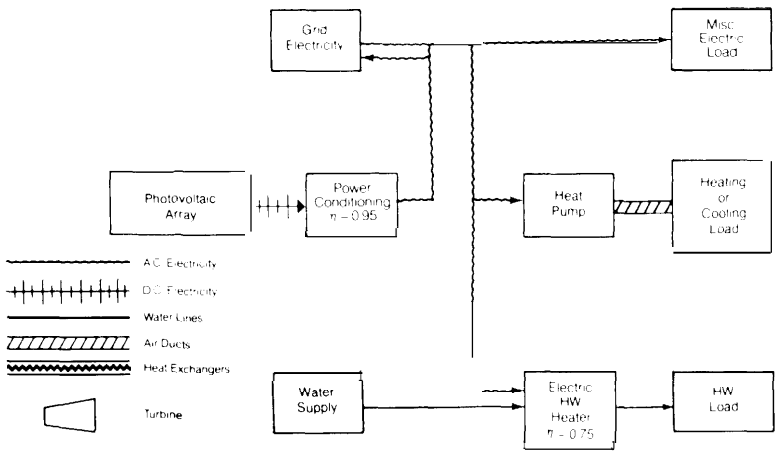

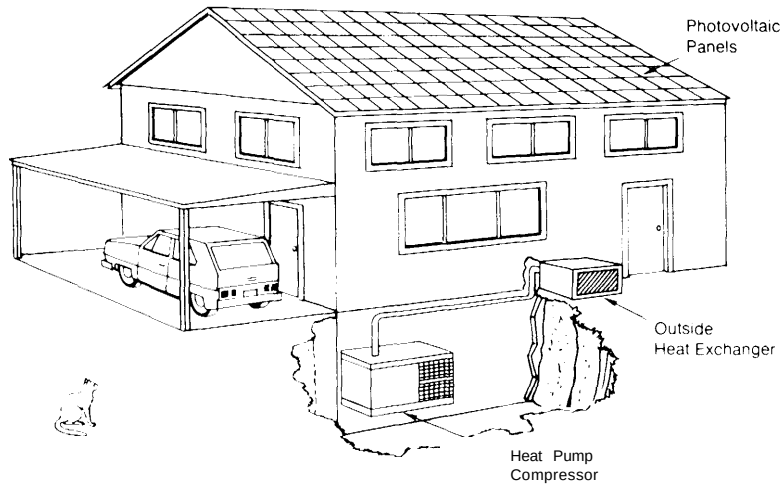

ITEMIZED COST OF COMPONENTS

Component	Size	Unit cost	First cost (incl. O&P)	Annual O & M	Life (yrs.)
1. Electric heat Wimp.	1.3 tons	800 $/ton	$1,040	$50	10
2. Ductwork	—	—	425	0	30
3. Electric water hooter	40 gals	225 ea.	225	0	15
5. Nontracking 100x plastic concentrator with 30% efficient cells.	39 m'	103 $/m'	. 2,010	0	30
——Plexiglass and dyes @ 45 $/m*			. {2,010	0	15
——Cells @ 15 $/m²					
—-Shipping @ 2 $/m²					
——Installation @ 20 $/m²					
—25% overhead and profit					
7. Power conditioning	13.1	53 $/kw	690	4	30
& Lightning protection	—	—	300	0	30
9. Extra insulation, storm doors and windows.	—	—	981	0	30
TOTAL			$11,381	$54	

*1, installed collector cost assumed replaced in t 5 yrs with total replacement in 30 yrs

ANNUAL ENERGY FLOWS
[Conventional reference system is IF-2)

	Energy consumed by ref. system	Backup consumed W/ sOlor/conservation	Energy saved (% of total)
Net Electricity (bought-sold) (MWh/unit)	28.0	2.8	90.0
Fuel consumed onsite (MMBtu/unit)	o.	0.	0.
Total energy requirement (bbl crude equiv.)[a]	6s.	7.	90.0
Electricity sold to grid annually (MWh, entire biting)			14.4
Annual peak electricity demand (kW, entire building)			19.0

B. LEVELIZED MONTHLY COSTS PER UNIT TO CONSUMER (Dollars)[b,c]
(Conventional reference system is IF-2]

	Escalation of conventional energy costs: Constant real energy prices	Energy price escalation I	Energy price escalation II
1. 1976 Startup			
0. Costs using solar (conservation) system:			
Total with no incentives	133. (170.)	144. (181.)	190. (227.)
Total with 20% ITC	125. (163.)	136. (174.)	182. (220.)
Toted with full incentives	106. (140.)	118.,6(151.)	164. (198.)
b. Costs using conventional reference system	142.		275.
2. 1985 Startup[d]			
a. Costs using solar (conservation) system:			
(capitol related Cants	81. (118.)	81. (1 18.)	81. (118.)
(operation & maintenance costs)	8. (8.)	8. (8.)	8. (8.)
(fuel bill)	0. (0.)	0. (0.)	0. (0.)
(electric bill)	44. (44.)	61. (61.)	133. (133.)
Total with no incentives	133. (170.)	150. (187.)	222. (259.)
Total with 20% IT	125. (163.)	142. (181.)	214. (252.)
Total with full incentives	106. (140.)	124. (158.)	196. (230.)
b. Costs using conventional reference system	142.	183.	3 5 0.

C. EFFECTIVE COST OF ENERGY TO CONSUMER
(Conventional reference system is IF-2)

Levelized cost of solar energy or 'conservation' ner#	Type of incentives given: No incentives	20% ITC	Full incentives
$/MMBtu primary fuel	2.00 (3.50)	1.68 (3.23)	.94 (2.30)
¢/kWh electricity	2.36 (4.12)	1.98 (3.80)	1.10 (2 71)

Levelized price paid for conventional energy[b,e]	Escalation of conventional energy costs: Constant real energy prices	Energy price escalation I	Energy price escalation II
$/MMBtu primary fuel	3.72	4.68	8.60
¢/kWh electricity	4.38	5.51	10.12

Table IV-43.—Albuquerque: Solar Photovoltaic System—Insulated Single Family House Using Flat-Plate Air-Cooled Silicon Arrays ($O.SO/Watt), Low-Temperature Thermal Storage; Building Equipped With Improved IF-2 Space-Conditioning

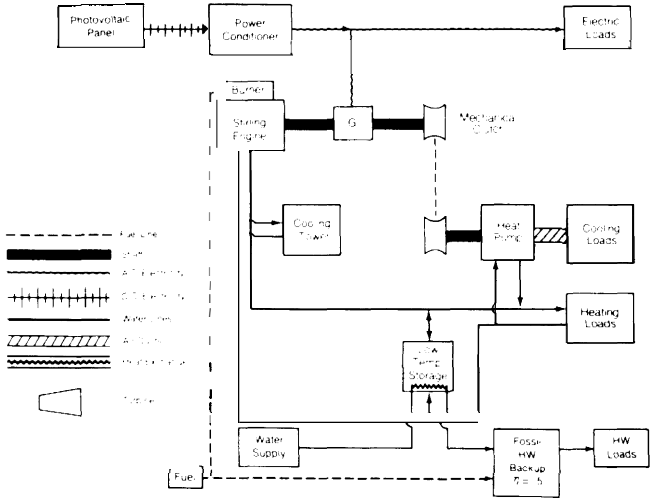

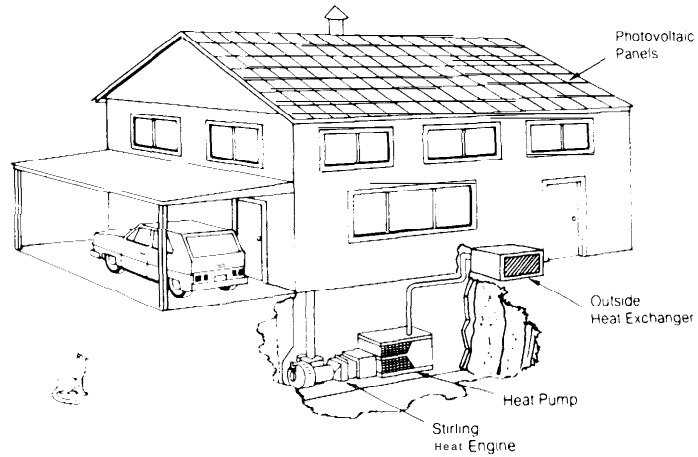

A. ITEMIZED COST OF COMPONENTS

Component	Size	Unit cost	First cost (incl. O&P)	Annual O&M	life (yrs)
1. Heat pump	1.3 tons	800 $/ton	$1,040	$50	10
2. Ductwork	—	—	425	0	30
3. Electric hat water	40 gal	$225 ea.	225	0	15
4. Air-cooled silicon PV (500 $/kW) (η = 0.12)	59 m²	88 $/m²	'2,600	0	30
—Silicon array @ 60 $/m'			*2,600	0	15
——Shipping @ 2 $/m²					
—-Installation @ 8 $/m'					
——25% overhead and profit					
5. Power conditioning	7 kW	114	800	8	30
6. lightning protection	—	—	300	0	30
7. Backup engine and generator	6.53 kW	225 $/kW	1,470	53	10
8. Hwt exchanger		33 ea.	33	0	30
9. Law temperature sty	50 kWh	2 $/kWh	100	0	30
10. Extra insulation, storm dears and windows		—	981	0	30
TOTAL			$10,574	$111	

•½ installed collector cost assumed replaced in 15 yin., with total replacement in 30 yrs.

ANNUAL ENERGY FLOWS

(Conventional reference system is IF-2)

	Energy consumed by ref. system	Backup consumed W/ solar/conservation	Energy saved (% of total)
Net Electricity (bought-sold) (MWh/unit)	28.0	0.	100.0
Fuel consumed onsite (MMBtu/unit)	0.	86.	o.
Total energy requirement (bbl crude equiv.)[a]	68.	18.	73.9

Electricity said to grid annually (MWh, entire building)	0.
Annual peak electricity demand (kW, entire building)	0.

B. LEVELIZED MONTHLY COSTS PER UNIT TO CONSUMER (Dollars)[b,c]

(Conventional reference system is IF-2)

	Escalation of conventional energy costs: Constant real energy prices		Energy price escalation I		Energy price escalation II	
1. 1976 Startup						
a. Costs using solar (conservation) system:						
Total with no incentives	159.	(211.)	171.	(224.)	183.	(235.)
Total with 20Y. IT	146.	(200.)	159.	[213.)	170.	(224.)
Total with full incentives	129.	(164.)	142.	(177.)	154.	(188.)
b. Costs using conventional reference system	142.		168.		276.	
2. 1985 Startup[d]						
a. costs using solar (conservation) system:						
(capitol related costs)	124.	(176.)	124.	(176.)	124.	(176.)
(operation & maintenance costs)	16.	[16.)	16.	(16.)	16.	[16.)
(fuel bill)	19.	(19.)	38.	(38.)	57.	(57.)
(electric bill)	o.	(0.)	o.	[0.)	o.	(o.)
Total with no incentives	159.	(211.)	178.	[231.)	197.	(249.)
Total with 20% IT	146.	(200.)	166.	(220.)	184.	(238.)
Total with full incentives	129.	(164.)	149.	[184.)	167.	(202.)
b. Costs using conventional reference system	142.		183.		330.	

C. EFFECTIVE COST OF ENERGY TO CONSUMER

(Conventional reference system is IF-2)

Levelized cost of solar energy or 'conservation' energy[c]	Typo of incentives given: No incentives		20% ITC		Full incentives	
$/MMBtu primary fad	4.94	(7.52)	4.32	[6.98)	3.49	(5.20)
¢/kWh electricity	5.82	(8.85)	5.08	(8.22)	4.11	(6.12)

Levelized price paid for conventional energy[b,e]	Escalation of conventional energy cash: Constant real energy prices	Energy price escalation I	Energy price escalation II
$/MMBtu primary m	3.72	4.68	8.60
¢/kWh electricity	4.38	5.51	10.12

Table [V.44.—Aibuquerque: Conventional System—All Electric Single Family House Using Electric Resistance Heat and Window A/C (SF-3)

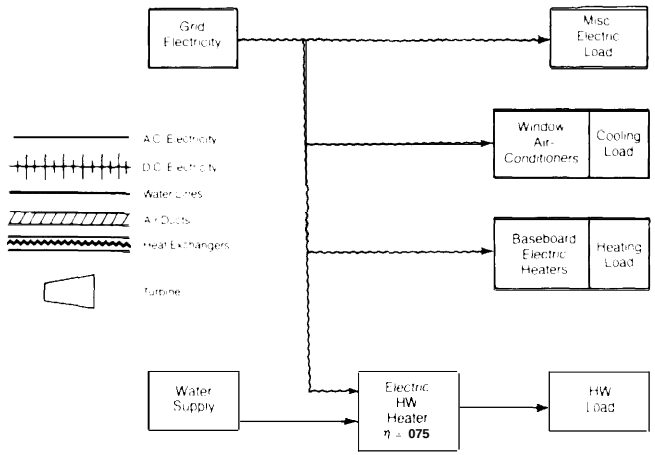

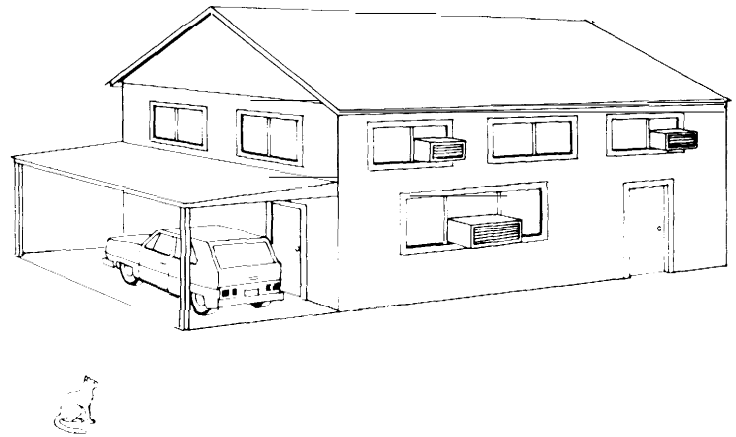

A. ITEMIZED COST OF COMPONENTS

Component	Size	Unit cost	First cost (incl. O&P)	Annual O & M	Lif. (Yin)
1. Baseboard electric heat	13.1	67 $/kW	$878		30
2. Window electric a/c	1.85 tons	280 S/ton	518	$3:	10
3. Electric water heater	40 gal	$225 ea.	225	0	15
TOTAL			$1,621	$30	

B. LEVELIZED MONTHLY COSTS PER UNIT TO CONSUMER (Dollars)[b,c]

(Conventional reference system is SF-3)

	Escalation of conventional energy costs					
	Constant real energy prices		Energy price escalation I		Energy price escalation II	
1. 1976 Startup						
Total with no incentives	177.	(185.)	216.	[224.)	378.	[386.)
Total with 20% IT	177.	[185.)	216.	(224.)	378.	(386.)
Total with full incentives	177.	[185.)	216.	(224.)	378.	[386.)
2. 1985 Startup[d]						
(capital related costs)	19.	[27.)	19.	[27.)	19.	[27.)
(operation & maintenance costs)	4.	(4.)	4.	[4.)	4.	(4.)
(fuel bill)	o.	(o.)	o.	(0.)	0.	[0.)
(electric bill)	153.	(153.)	215.	[215.)	467.	(467.)
Total with no incentives	177,	[185.)	239.	(246.)	490.	[498.)
Total with 20% IT	177.	[185.)	239.	[246.)	490.	(498.)
Total with full incentive	177.	(185.)	239.	(246.)	490.	(498.)

ANNUAL ENERGY FLOWS

(Conventional reference system is SF-3)

	Energy consumed by ref. system	Backup consumed W/ solar/conservation	Energy saved (% of total)
Net Electricity (bought-sold) (MWh/unit)	43.8	43.8	0.
Fuel consumed onsite (MMBtu/unit)	o.	0.	0.
Total energy requirement (bbl crude equiv.)[a]	107.	107.	0.
Electricity sold to grid annually (MWh, entire building)			0.
Annual peak electricity demand (kW, entire building)			27.3

C. EFFECTIVE COST OF ENERGY TO CONSUMER

(Conventional reference system is SF-3)

Levelized cost of solar energy or 'conservation' energy[c]	Type of incentives given					
	No incentives		20% ITC		Full incentives	
$/MMBtu primary fuel	N/A	[N/A)	N/A	(N/A)	N/A	(N/A)
¢/kWh electricity	N/A	(N/A)	N/A	(N/A)	N/A	(N/A)

Levelized price paid for conventional energy[b,e]	Escalation of conventional energy costs		
	Constant real energy prices	Energy price escalation I	Energy price escalation II
$/MMBtu primary fuel	3.57	4.49	8.25
¢/kWh electricity	4.20	5.29	9.72

Table IV-45.—Albuquerque: Conventional System—Ail Electric Single Family I-louse Using Electric Resistance Heat and Window A/C, 65/85 Thermostat Settings (SF-3)

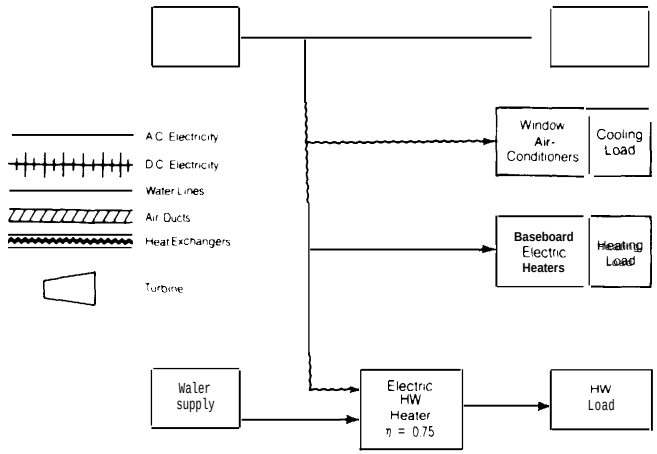

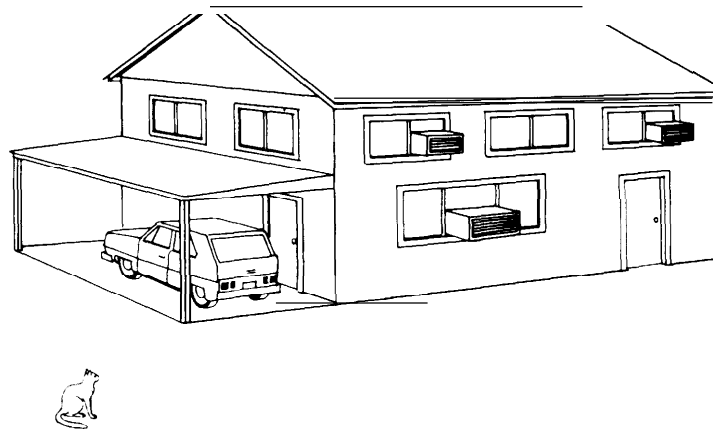

A. ITEMIZED COST OF COMPONENTS

Component	Size	Unit coot	First cost (incl. O & P)	Annual O&M	Life (yrs)
1. Baseboard electricheat	13.1	67 $/kW	$878	0	30
2. Window electric a/c	1.85 tons	280 $/ton	518	$30	10
3. Electric waterheater	40 gal	$225 ea.	225	0	15
TOTAL			$1,621	S30	

B. LEVELIZED MONTHLY COSTS PER UNIT TO CONSUMER (Dollars)[b,c]

(Conventional reference system is SF-3)

	Escalation Of conventional energy costs					
	constant real energy prices		Energy price escalation I		Energy price escalation II	
1. 1976 Startup						
0. Costs using solar [conservation) system:						
Total with no incentives	171.	(179.)	209.	(217.)	364.	(372.)
Total with 20% ITC	171.	(179.)	209.	(217.)	364.	(372.)
Total with full incentives	171.	(179.)	209.	(217.)	364.	(372.)
b. *Costs using conventional reference system*	*177.*		*216.*		*378*	
2. 1985 Startup[d]						
a. Costs using solar (conservation) system:						
(capitol related Costa)	19.	[27.)	19.	(27.)	19.	(27.)
(operation & maintenance costs)	4.	(4.)	4.	(4.)	4.	(4.)
(fuel bill)	o.	(0.)	o.	(o.)	o.	(o.)
(electric &-	147.	[147.)	207.	(207.)	449.	(449.)
Total with no incentives	171.	(179.)	230.	(238.)	472.	(480.)
Total with 20% IT	171.	(179.]	230.	(238.)	472.	(480.)
Total with full incentives	171.	(179.)	230.	(238.)	472.	*(480.)*
b. *Costs using conventional reference system*	*177.*		239.		*490.*	

ANNUAL ENERGY FLOWS

(Conventional reference system is SF-3)

	Energy consumed by mf. system	Backup consumed w/ solar/conservation	Energy saved (% cd total)
Net Electricity (bought-sold) (MWh/unit)	43.8	42.0	4.2
Fuel consumed onsite (MMBtu/unit)	o.	0.	0.
Total energy requirement (bbl crude equiv.)[a]	107.	103.	4.2
Electricity sold to grid annually (MWh, entire building)			0.
Annual peak electricity demand (kW, entire building)			27.3

C. EFFECTIVE COST OF ENERGY TO CONSUMER

Conventional reference system is SF-3)

Levelized cost of solar energy or 'conservation' energy[c]	Type of incentives given					
	No incentives		20% ITC		Full incentives	
$/MMBtu primary m	-.00	[4.36)	-.00	(4.36)	-.00	(4.36)
¢/kWh electricity	-.00	(5.13)	-.00	(5.13)	-.00	(5.13)

	Escalation of conventional - costs		
Levelized price paid for conventional energy[b,e]	constant real energy prices	Energy price escalation I	Energy price escalation II
$/MMBtu primary fuel	3.57	449	8.25
¢/kWh electricity	4.20	5.29	9.72

Note:

From this point onward, this report consists of approximately 500 pages of tables in very small fonts that were unsuitable for conversion using optical character recognition. The pages may be posted to the version of the report stored on the OTA websites, but they will inevitably contain many recognition errors, and users that wish to consult these tables should consider obtaining a paper or microfilm copy through NTIS or through a library.